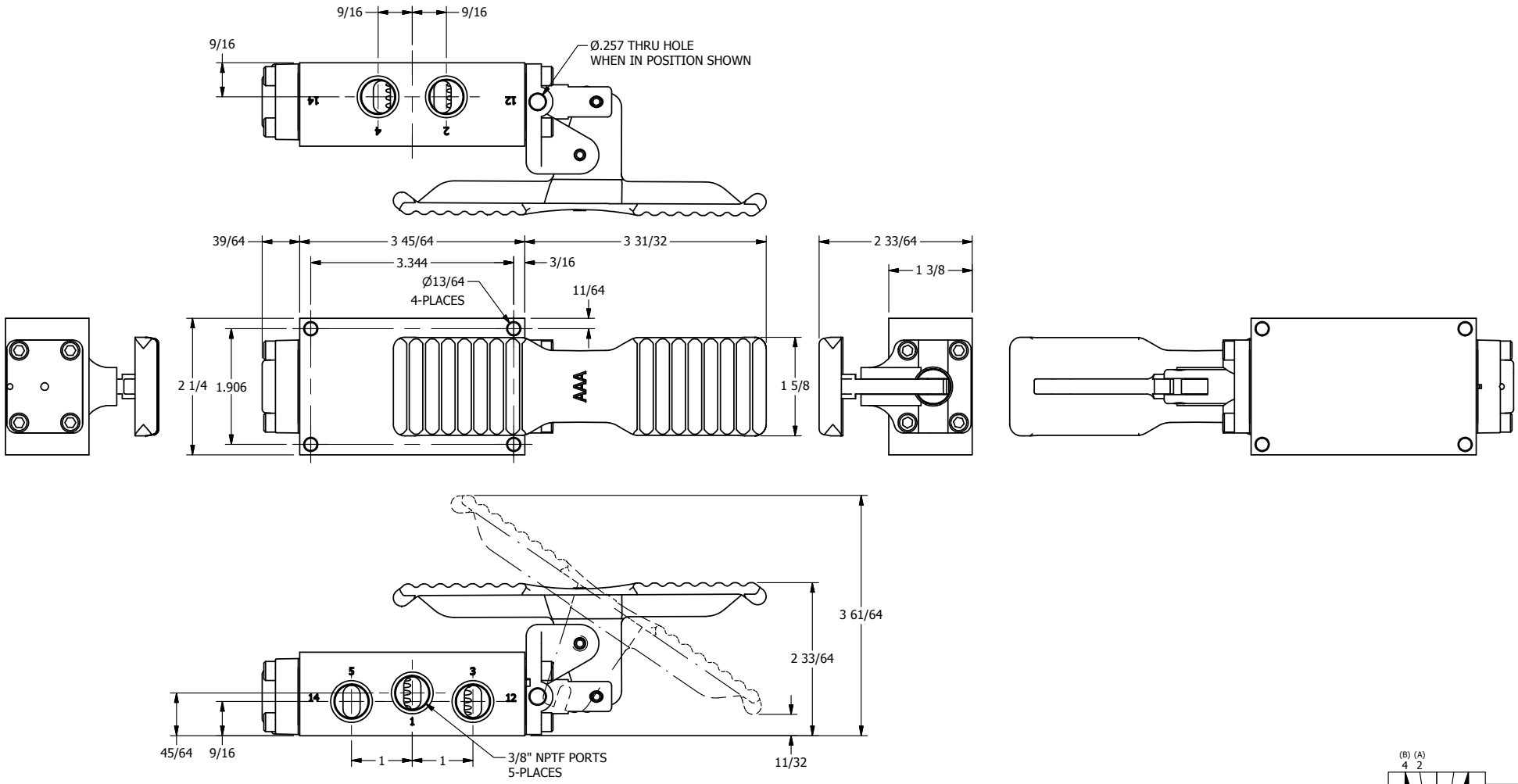

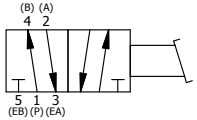

AAA PRODUCTS INTERNATIONAL 7114 Harry Hines Blvd Dallas, TX 75235	TITLE: 3/8" SIDE PORT, TREADLE, 2 POS, FRICTION POS, TREADLE RTRN, BRASS & STAINLESS, LOCKOUT POS 'C'	PART NO.: DIM_ZTE3LO

THE INFORMATION CONTAINED WITHIN THIS DOCUMENT IS PROPRIETARY TO AAA PRODUCTS AND MAY NOT BE DISCLOSED WITHOUT PRIOR WRITTEN CONSENT