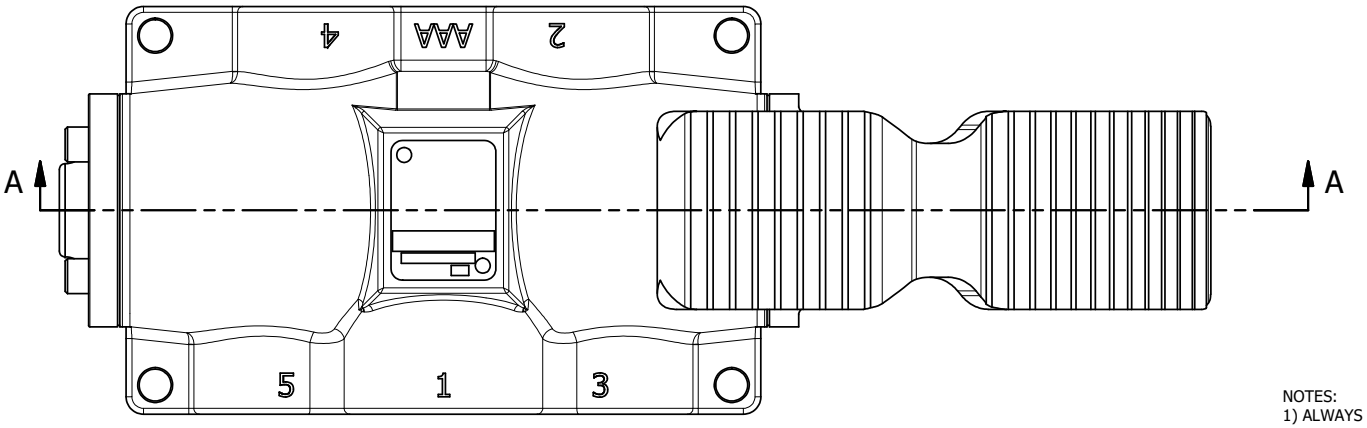

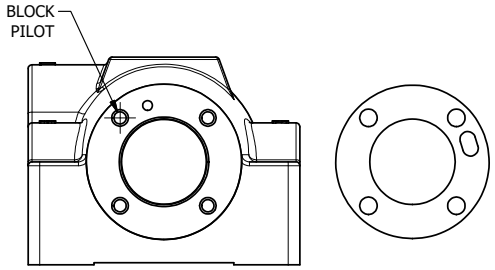

POSITION GASKET ON END OF VALVE SO
GASKET SEALS PILOT HOLE,
BOTH SIDES (SIDE 'A' SHOWN)

NOTES:
1) ALWAYS GIVE VALVE MODEL AND PART NUMBER WHEN ORDERING PARTS.

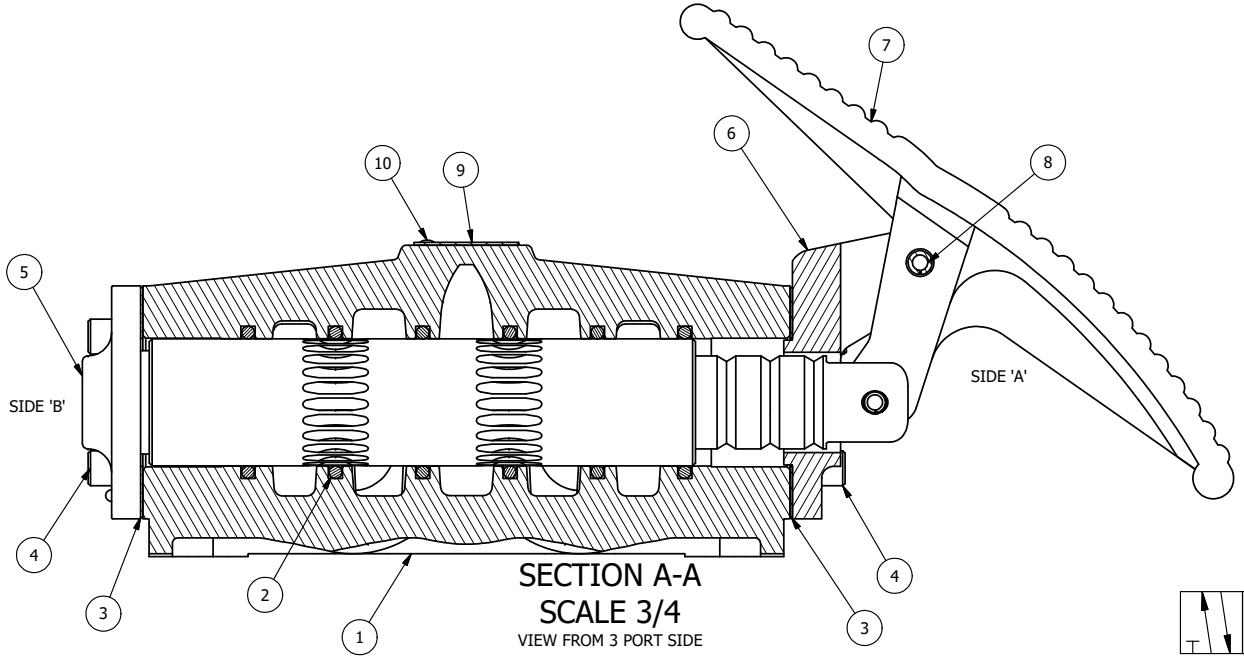

SECTION A-A
SCALE 3/4
VIEW FROM 3 PORT SIDE

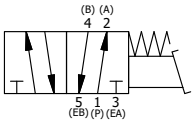

FLG	QTY	PART NO	DESCRIPTION
10	2	V-212	SCREW, #2 X 3/16 DRIVE, TYPE U, OVAL HEAD, STAINLESS STEEL
9	1	AN-114	NAMEPLATE, BLANK, FOR VALVES WITH SPRINGS OR DETENTS
8	1	V-70	PIN, ROLL 1/4 X 1 1/8 FOR 3/4 & 1" HAND AND FOOT VALVES
7	1	FT8	FOOT TREADLE, DUCTILE IRON, 3/4" & 1"
6	1	FE8	END CAP, HAND & FOOT, STEEL, NICKEL PLATE, 3/4" & 1" VALVES
5	1	AY-HA8	ASSY - RTRN TO POS A, LEVER OR TREADLE, 3/4" & 1" VALVE
4	8	V-46	SCREW, 1/4-20 X 3/4, SOCKET HEAD CAP
3	2	ECG48	GASKET - END CAP, 1/2", 3/4" & 1" VALVE
2	6	V-30	O-RING, BUNA-N, 70 DURO, AS-220, (REF 1-3/8 X 1-5/8 X 1/8), 3/4" & 1" VALVES
1	1	B6-1	BODY, 3/4" SIDE PORT, UPPER PILOTS, ANODIZED

LIMITS ON DIMENSIONS UNLESS OTHERWISE SPECIFIED
2-PL DECIMAL ± .01
3-PL DECIMAL ± .005
FRACTIONAL ± 1/64
ANGULAR ± 1/2'

AAA PRODUCTS INTERNATIONAL
7114 Harry Hines Blvd
Dallas, TX 75235

DRAWN: RMcKenna	DATE: 9/12/2016	CHECKED: KWaite	DATE: 9/12/2016
SCALE: 3/4	SHEET: 1 OF 1	RELEASED: HWomack	DATE: 9/12/2016

TITLE:
3/4" SIDE PORT, TREADLE, 2 POS, RVRS SPR RTRN

PART NO.: TA6

REV.:

D:\Engineering\Product\Valves\Assembly\pedal\TA3\V61\TA6.dw

THE INFORMATION CONTAINED WITHIN THIS DOCUMENT IS PROPRIETARY TO AAA PRODUCTS AND MAY NOT BE DISCLOSED WITHOUT PRIOR WRITTEN CONSENT