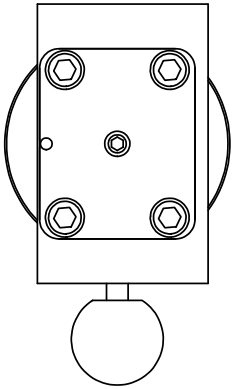

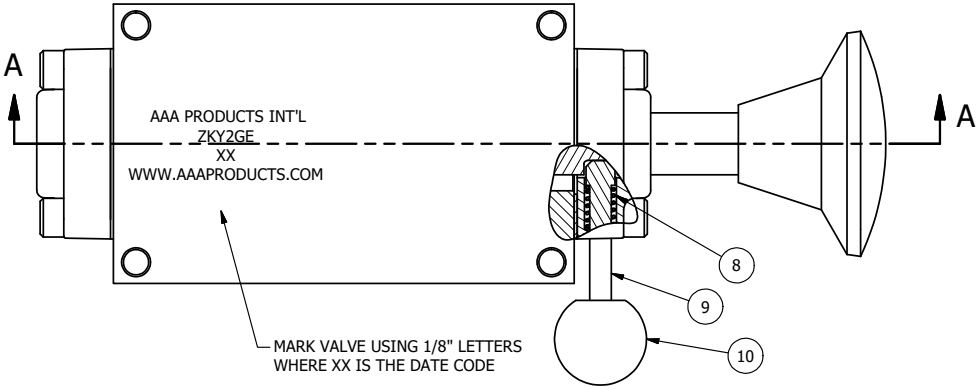

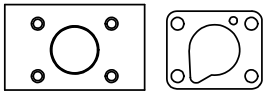

POSITION GASKET ON END OF VALVE SO
MOUNTING HOLES ALIGN,
BOTH ENDS (SIDE 'A' SHOWN)

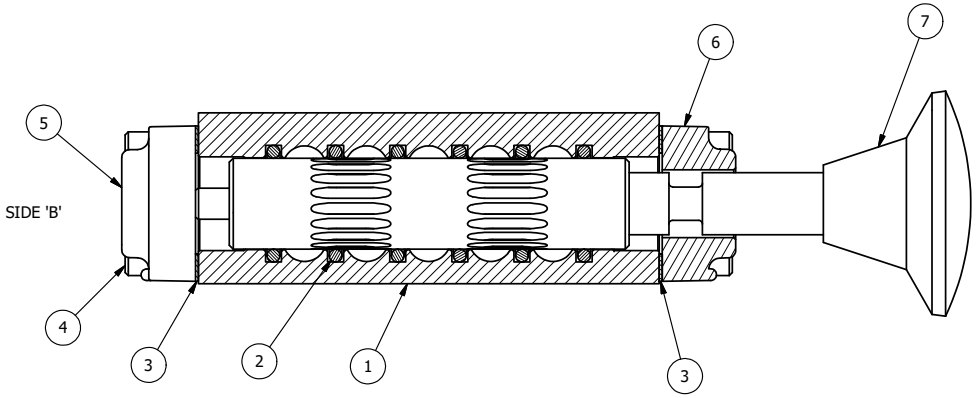

SECTION A-A
SCALE 1 : 1
VIEW FROM 3 PORT SIDE

FLG	QTY	PART NO	DESCRIPTION
10	1	V-175	KNOB, BLACK, (BRASS 10-32 INSERT), 3/4 DIA BALL, PIN LOCK
9	1	V-315-SS	PIN, PIN LOCK, 303 STAINLESS, 1/4" & 3/8" VALVE
8	1	BBSS-1	SPRING - BUTTON BLEEDER, STAINLESS STEEL, 1/8" NPTF
7	1	V-71	KNOB, BLACK, PALM, (BRASS 5/16-18 INSERT), 1-13/16 DIA X 1-3/8 HEIGHT
6	1	PEC3-10PLL	END CAP, PALM, PIN LOCK, LEFT, STAINLESS STEEL, 1/4" & 3/8" VALVE
5	1	AY-KY3GE-SA	ASSY - SPR CTR, FLOAT CTR SPL, PALM, SS W/AL SPL, PINLOCK 'B', 1/4 & 3/8 VALVES
4	9	V-38-SS	SCREW, 10-24 X 3/4, SOCKET HEAD CAP, 18-8 SS
3	2	ECG3	GASKET - END CAP, 1/4" & 3/8" VALVE
2	6	V-39	O-RING, VITON, STD BODY, 1/4" & 3/8" VALVES
1	1	ZB2-2	BODY - BRASS, NO PILOTS, 1/4" SIDE PORT VALVE

NOTES:
1) ALWAYS GIVE VALVE MODEL AND PART NUMBER WHEN ORDERING PARTS.
2) LUBRICATE PINLOCK AND SPRING.

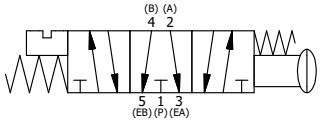

LIMITS ON DIMENSIONS UNLESS OTHERWISE SPECIFIED	2-PL DECIMAL ± .01 3-PL DECIMAL ± .005 FRACTIONAL ± 1/64 ANGULAR ± 1/2'	AAA PRODUCTS INTERNATIONAL 7114 Harry Hines Blvd Dallas, TX 75235	
DRAWN: RMcKenna	DATE: 5/7/2015	CHECKED: KWaite	DATE: 5/17/2015
SCALE: 1 : 1	SHEET: 1 OF 1	RELEASED: HWomack	DATE: 5/17/2015
TITLE: 1/4" SIDE PORT, PALM, 3 POS, SPR CTR, PALM SHFT, FLOAT CTR SPL, BRASS & STAINLESS, PINLOCK B		PART NO.: ZKY2GE	REV.:

THE INFORMATION CONTAINED WITHIN THIS DOCUMENT IS PROPRIETARY TO AAA PRODUCTS AND MAY NOT BE DISCLOSED WITHOUT PRIOR WRITTEN CONSENT

D:\Engineering\Product\Valve\Assembly\Palm\KY\DWG\ZKY2GE.dw