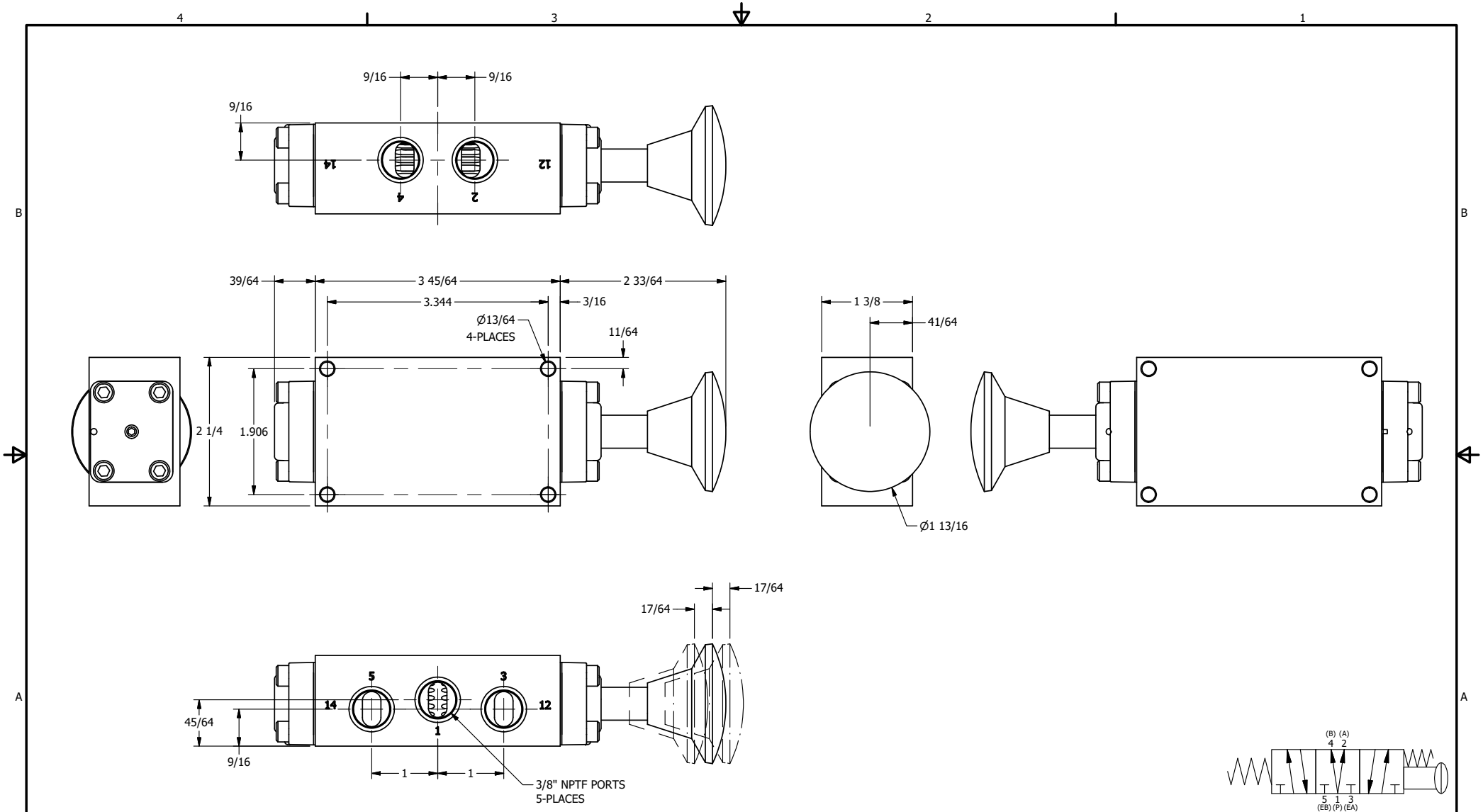

AAA PRODUCTS INTERNATIONAL
7114 Harry Hines Blvd
Dallas, TX 75235

TITLE: 3/8" SIDE PORT, PALM, 3 POS, SPR CTR, PALM SHFT, FLOAT CTR SPL, BRASS & STAINLESS

DRAWING NO.: DIM_ZKY3D

THE INFORMATION CONTAINED WITHIN THIS DOCUMENT IS PROPRIETARY TO AAA PRODUCTS AND MAY NOT BE DISCLOSED WITHOUT PRIOR WRITTEN CONSENT