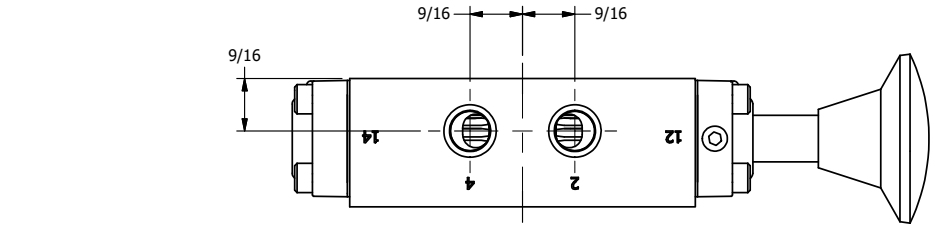


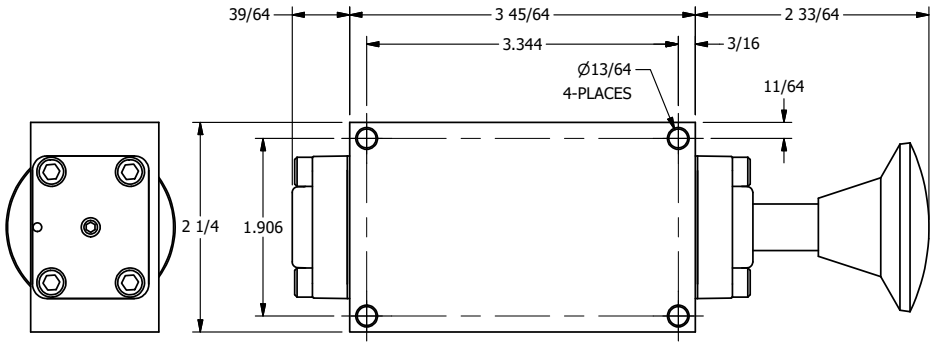


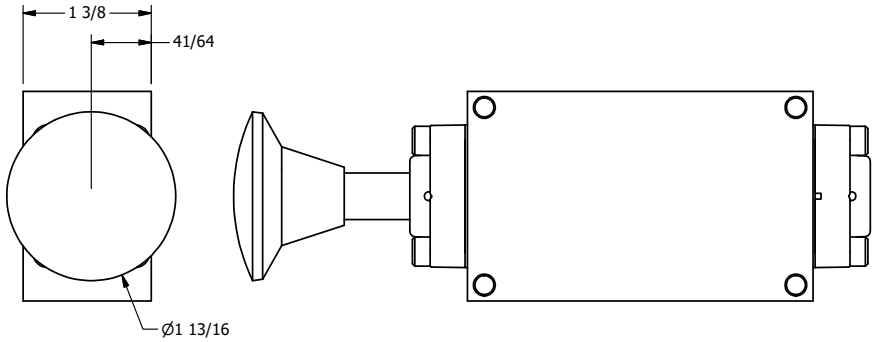


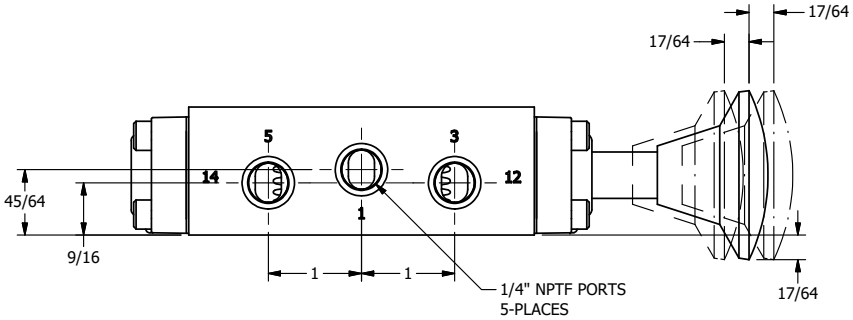


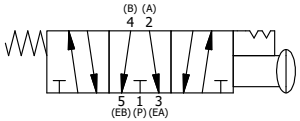


| | | |
|---|---|---|
| **AAA PRODUCTS INTERNATIONAL**<br>7114 Harry Hines Blvd<br>Dallas, TX 75235 | TITLE: 1/4" SIDE PORT, PALM, 3 POS, DETENT A, SPR CTR FROM C, FLOAT CTR SPL, BRASS & STAINLESS | DRAWING NO.: DIM_ZKX2G |

THE INFORMATION CONTAINED WITHIN THIS DOCUMENT IS PROPRIETARY TO AAA PRODUCTS AND MAY NOT BE DISCLOSED WITHOUT PRIOR WRITTEN CONSENT