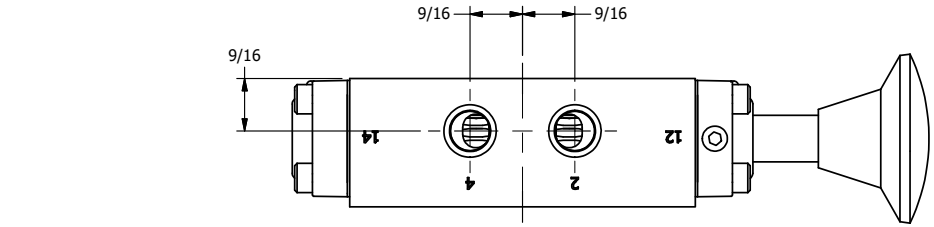

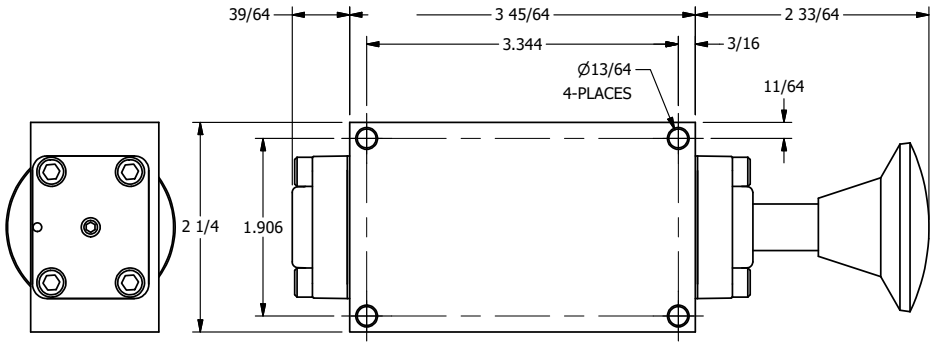

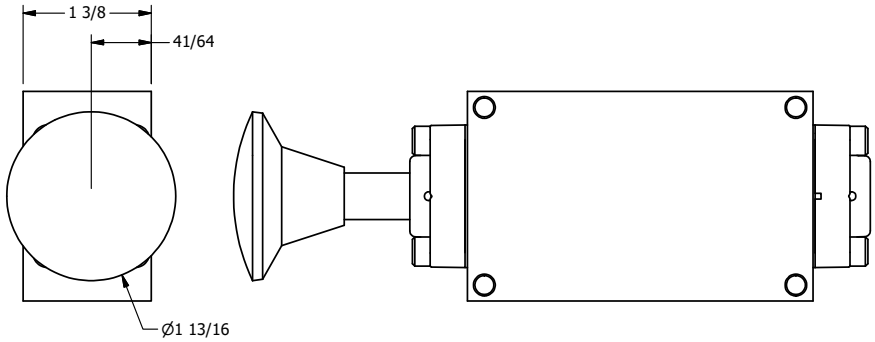

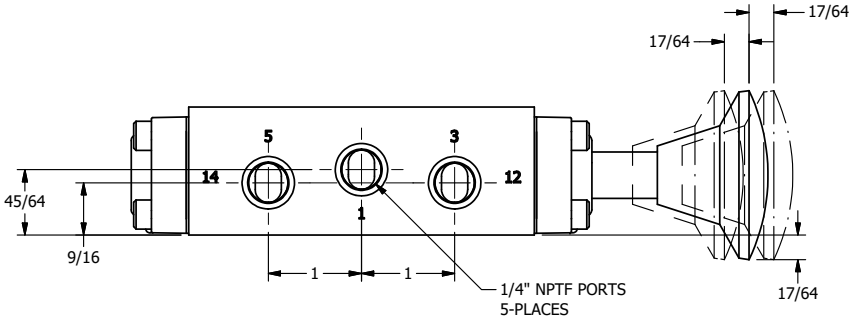

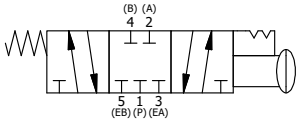

AAA PRODUCTS INTERNATIONAL
7114 Harry Hines Blvd
Dallas, TX 75235

TITLE: 1/4" SIDE PORT, PALM, 3 POS, DETENT A, SPR CTR FROM C, CLSD CTR SPL, BRASS & STAINLESS

DRAWING NO.: DIM_ZKX2

THE INFORMATION CONTAINED WITHIN THIS DOCUMENT IS PROPRIETARY TO AAA PRODUCTS AND MAY NOT BE DISCLOSED WITHOUT PRIOR WRITTEN CONSENT