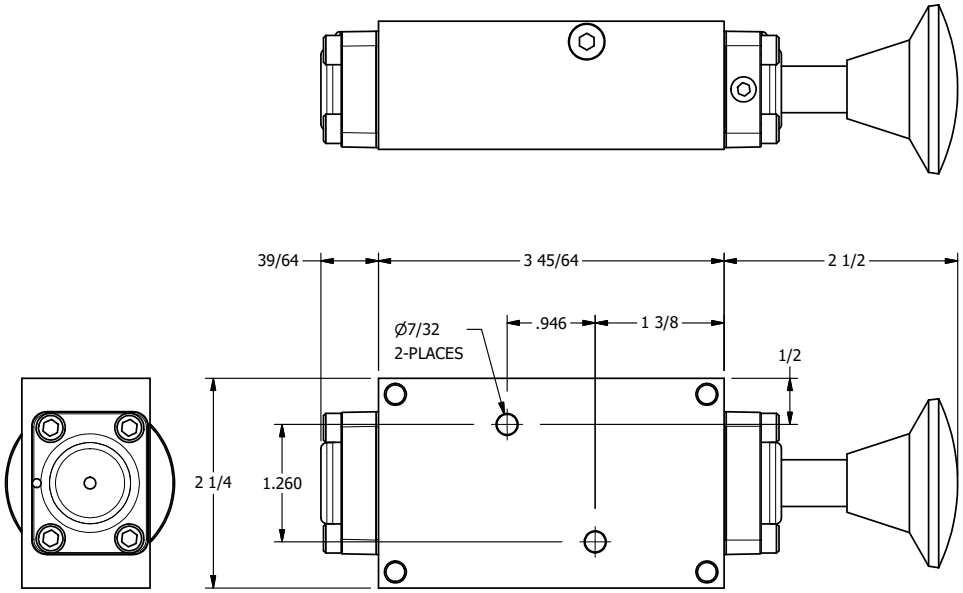

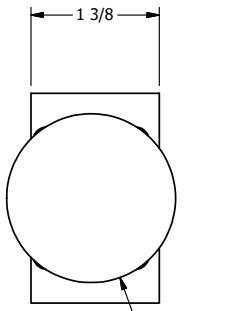

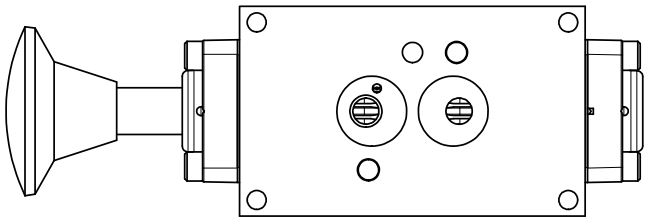

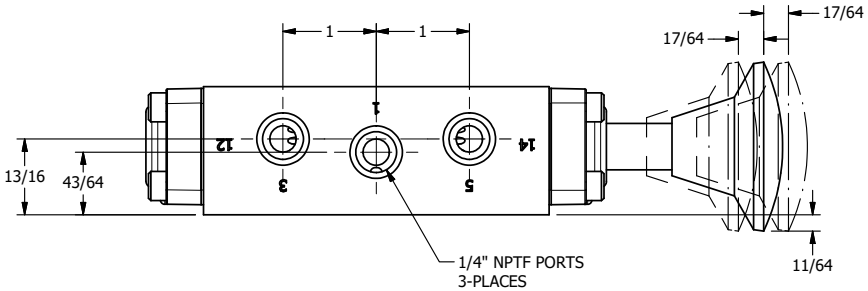

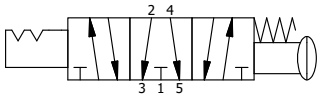

AAA PRODUCTS INTERNATIONAL 7114 Harry Hines Blvd Dallas, TX 75235	TITLE: 1/4" NAMUR, PALM, 3 POS, DETENT C, SPR CTR FROM A, FLOAT CTR, BRASS & SS, RED KNOB	DRAWING NO.: DIM_ZNKW2GJ

THE INFORMATION CONTAINED WITHIN THIS DOCUMENT IS PROPRIETARY TO AAA PRODUCTS AND MAY NOT BE DISCLOSED WITHOUT PRIOR WRITTEN CONSENT