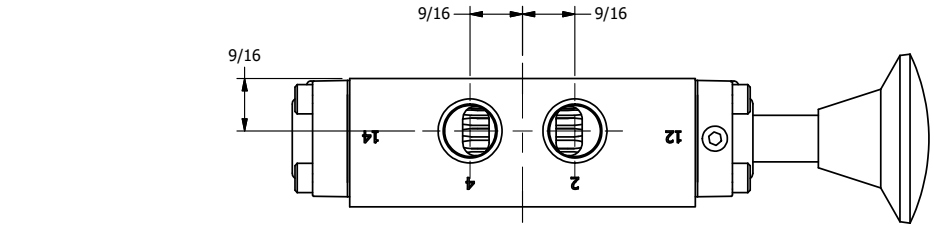

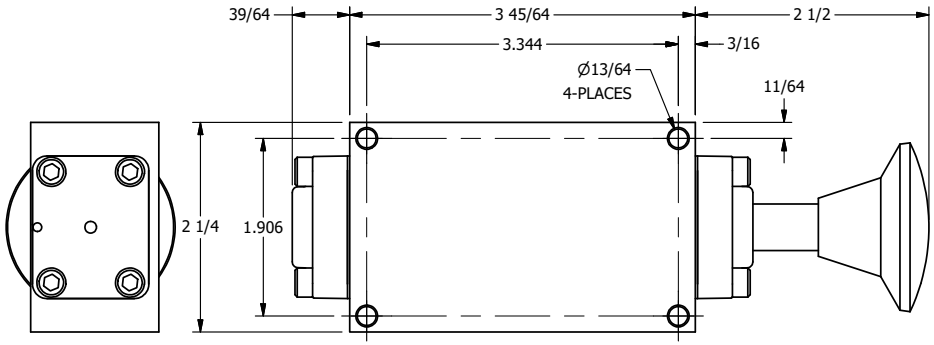

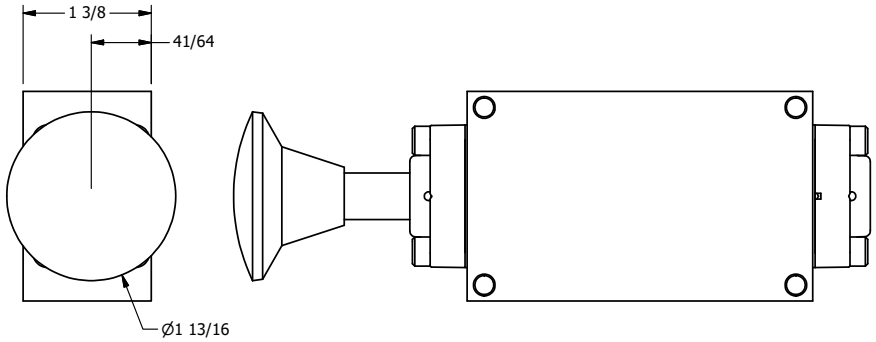

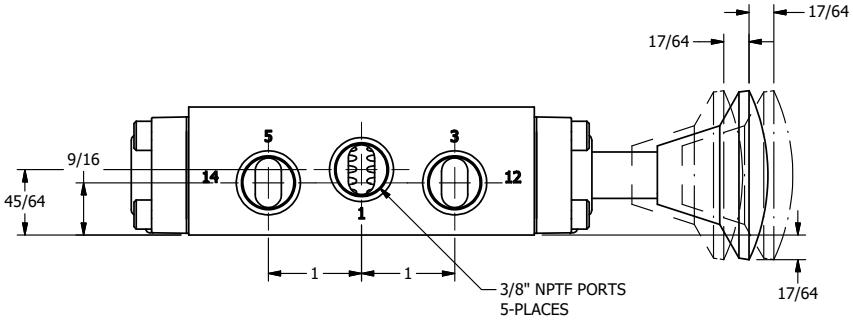

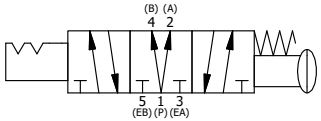

AAA PRODUCTS INTERNATIONAL
7114 Harry Hines Blvd
Dallas, TX 75235

TITLE: 3/8" SIDE PORT, PALM, 3 POS, DETENT C, SPR CTR FROM A, REGEN CTR SPL, BRASS & STAINLESS

DRAWING NO.: DIM_ZKW3D

THE INFORMATION CONTAINED WITHIN THIS DOCUMENT IS PROPRIETARY TO AAA PRODUCTS AND MAY NOT BE DISCLOSED WITHOUT PRIOR WRITTEN CONSENT