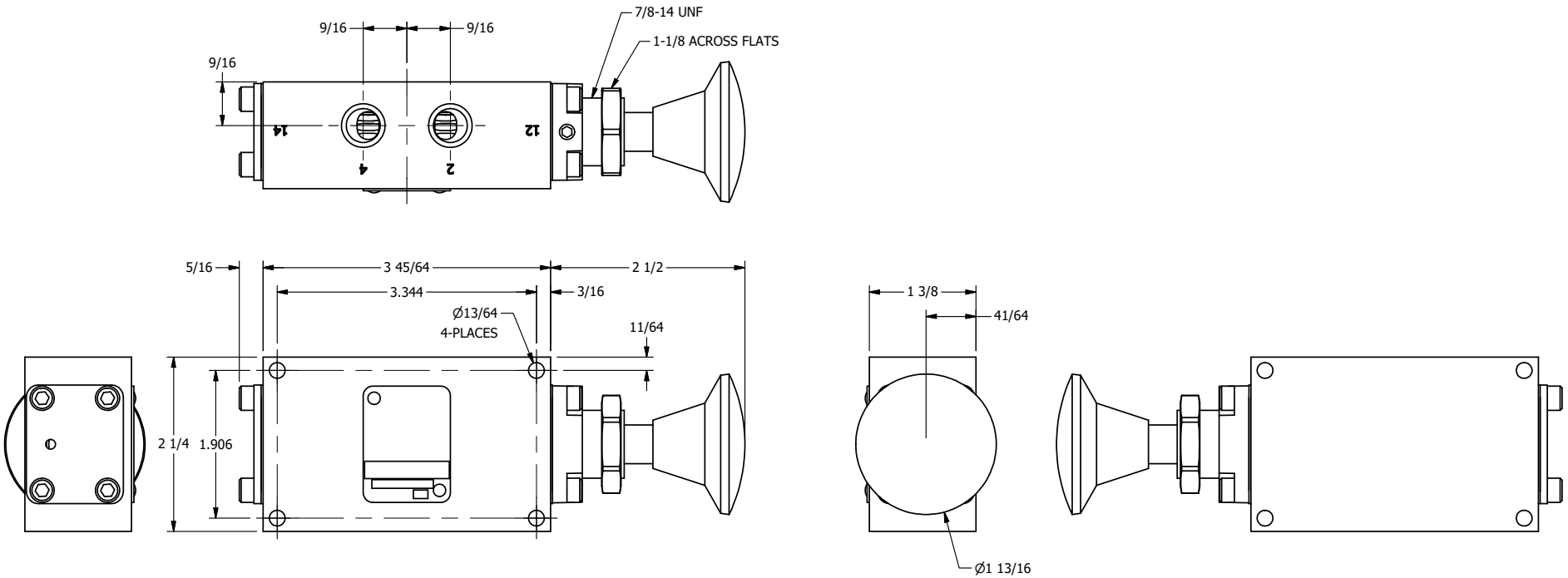

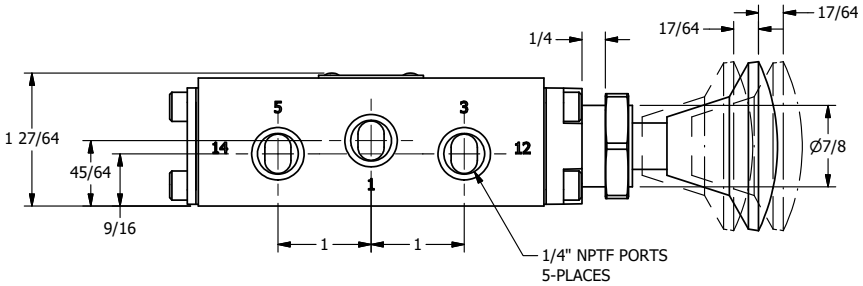

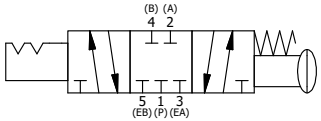

AAA PRODUCTS INTERNATIONAL 7114 Harry Hines Blvd Dallas, TX 75235	TITLE: 1/4" SIDE PORT, PALM, 3 POS, DETENT C, SPR CTR FRM A, CLSD CTR, PANEL MNT	DRAWING NO.: DIM_KW2R

THE INFORMATION CONTAINED WITHIN THIS DOCUMENT IS PROPRIETARY TO AAA PRODUCTS AND MAY NOT BE DISCLOSED WITHOUT PRIOR WRITTEN CONSENT