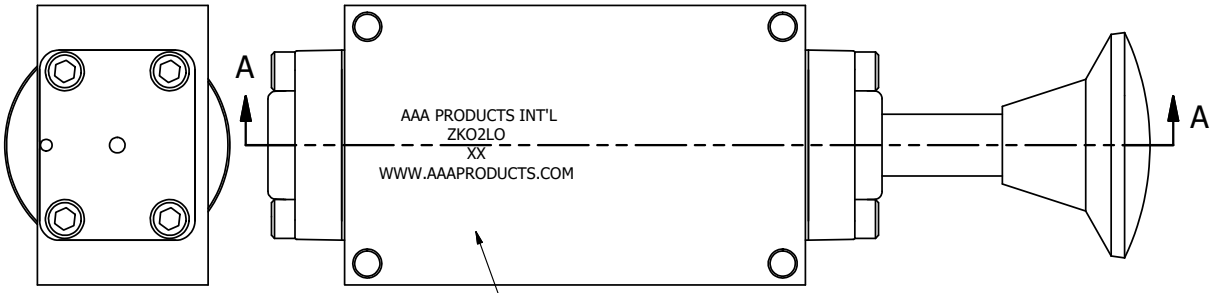

MARK VALVE USING 1/8" LETTERS
WHERE XX IS THE DATE CODE

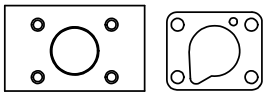

POSITION GASKET ON END OF VALVE SO
MOUNTING HOLES ALIGN,
BOTH ENDS (SIDE 'A' SHOWN)

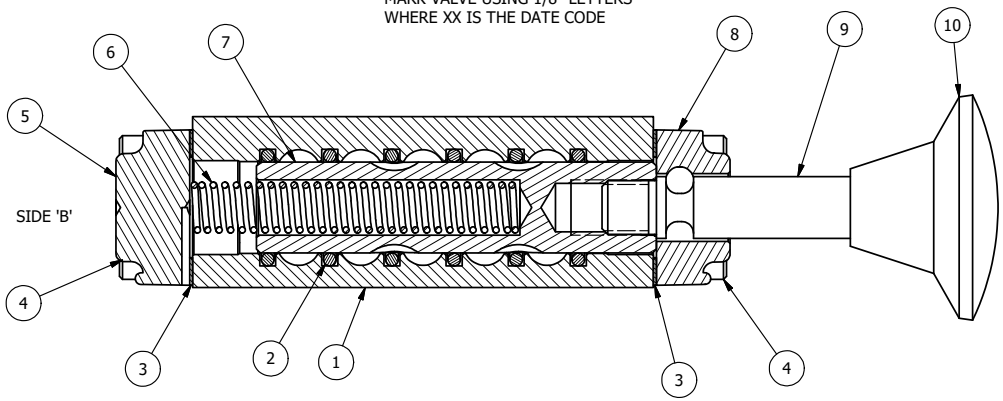

SECTION A-A
SCALE 1 : 1
VIEW FROM 3 PORT SIDE

FLG	QTY	PART NO	DESCRIPTION
10	1	V-71	KNOB, BLACK, PALM, (BRASS 5/16-18 INSERT), 1-13/16 DIA X 1-3/8 HEIGHT
9	1	PBS3-1LO-SS	STUD - PALM, LOCKOUT POS. C, STAINLESS STEEL 1/4" & 3/8" VALVE
8	1	PEC3-10LO	END CAP, PALM, LOCK OUT, STAINLESS STEEL, 1/4" & 3/8" VALVE
7	1	S3	SPOOL - STANDARD, 2 POS, CLSD CTR, 1/4" & 3/8" VALVE
6	1	CS3-2	SPRING - RETURN, (HO & KO) 1/4" & 3/8" VALVES
5	1	SEC3-3	END CAP, VENTED, STAINLESS STEEL, 1/4" & 3/8" VALVES
4	8	V-38-SS	SCREW, 10-24 X 3/4, SOCKET HEAD CAP, 18-8 SS
3	2	ECG3	GASKET - END CAP, 1/4" & 3/8" VALVE
2	6	V-39	O-RING, VITON, STD BODY, 1/4" & 3/8" VALVES
1	1	ZB2-2	BODY - BRASS, NO PILOTS, 1/4" SIDE PORT VALVE

NOTES:
1) ALWAYS GIVE VALVE MODEL AND PART NUMBER WHEN ORDERING PARTS.
USE MASTER LOCK #7LJKAP176 (ORDERED SEPERATELY, #7LJ KEYED ALIKE - KAP176).

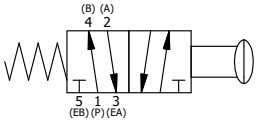

LIMITS ON DIMENSIONS UNLESS OTHERWISE SPECIFIED	2-PL DECIMAL ± .01 3-PL DECIMAL ± .005 FRACTIONAL ± 1/64 ANGULAR ± 1/2'	AAA PRODUCTS INTERNATIONAL 7114 Harry Hines Blvd Dallas, TX 75235	
DRAWN: RMcKenna	DATE: 5/10/2015	CHECKED: KWaite	DATE: 5/17/2015
SCALE: 1 : 1	SHEET: 1 OF 1	RELEASED: HWomack	DATE: 5/17/2015
TITLE: 1/4" SIDE PORT, PALM, 2 POS, SPRING RTRN, BRASS & STAINLESS, LOCKOUT C		PART NO.: ZKO2LO	REV.:

THE INFORMATION CONTAINED WITHIN THIS DOCUMENT IS PROPRIETARY TO AAA PRODUCTS AND MAY NOT BE DISCLOSED WITHOUT PRIOR WRITTEN CONSENT

D:\Engineering\Product\Valve\Assembly\Palm\KO\Solid\ZKO2LO.dw