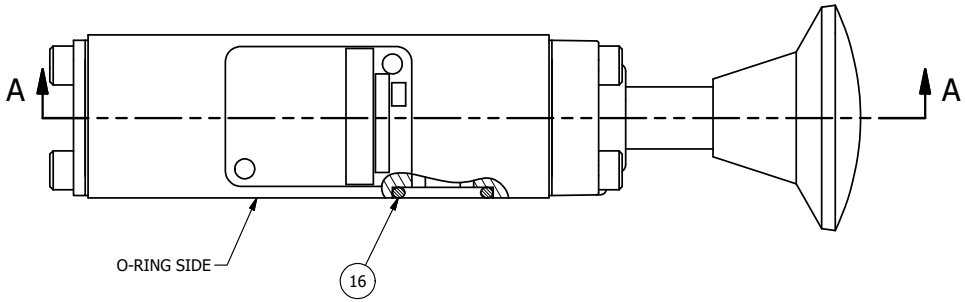

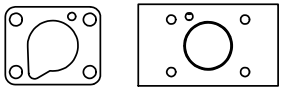

POSITION GASKET ON END OF VALVE
TO SEAL PILOT HOLE IF PRESENT,
BOTH SIDES (SIDE 'B' SHOWN)

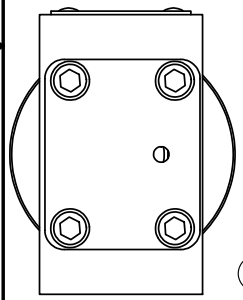

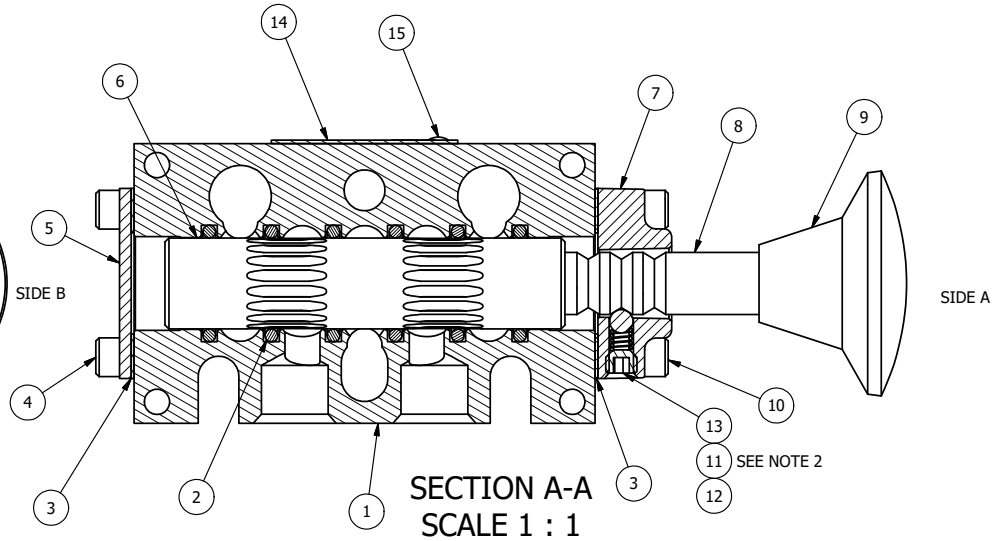

SECTION A-A
SCALE 1 : 1

FLG	QTY	PART NO	DESCRIPTION
16	3	V-110	O-RING, BUNA-N, 70 DURO, AS-114, (REF 5/8 X 13/16 X 3/32), 1/4" SLEEVE, 1/2" SUB, STACK
15	2	V-212	SCREW, #2 X 3/16 DRIVE, TYPE U, OVAL HEAD, STAINLESS STEEL
14	1	AN-114	NAMEPLATE, BLANK, FOR VALVES WITH SPRINGS OR DETENTS
13	1	V-21	SCREW, 1/4-20 X 3/16, SOCKET SET, CUP POINT
12	1	DS3	SPRING - DETENT, 1/4" & 3/8" VALVE
11	1	V-14	BALL, CHROME STEEL 3/16 DIA, GRADE 25, FOR DETENT
10	4	V-38	SCREW, 10-24 X 3/4, SOCKET HEAD CAP
9	1	V-543	KNOB, RED (BRASS 5/16-18 INSERT), PALM, 1 13/16 DIA, PUSH/PULL, 1/4" & 3/8" VALVES
8	1	PBS3-3	STUD - PALM, 3 POS. DETENT, 1/4" & 3/8" VALVE
7	1	PEC3-3	END CAP, PALM, DETENT, 380 AL, 1/4" & 3/8" VALVE
6	1	SSH3G	SPOOL - 'G', 3 POS, FLOAT CTR, 1/4" & 3/8" VALVE
5	1	SEC3	END CAP, 304 STAINLESS STEEL, 1/4" & 3/8" VALVE
4	4	V-37	SCREW, 10-24 X 1/2, SOCKET HEAD CAP
3	2	ECG3	GASKET - END CAP, 1/4" & 3/8" VALVE
2	6	V-39	O-RING, VITON, STD BODY, 1/4" & 3/8" VALVES
1	1	B3-10E	FINISHED - SOLID BODY, UPPER PILOTS, 3/8" STACKING VALVE

NOTES:
1) ALWAYS GIVE VALVE MODEL AND PART NUMBER WHEN ORDERING PARTS.
2) LUBRICATE DETENT BALL, SPRING AND STUD.

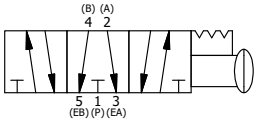

LIMITS ON DIMENSIONS UNLESS OTHERWISE SPECIFIED	2-PL DECIMAL ± .01 3-PL DECIMAL ± .005 FRACTIONAL ± 1/64 ANGULAR ± 1/2'	AAA PRODUCTS INTERNATIONAL 7114 Harry Hines Blvd Dallas, TX 75235
DRAWN: RMcKenna	DATE: 5/15/2015	CHECKED: KWaite DATE: 5/17/2015
SCALE: 1 : 1	SHEET: 1 OF 1	RELEASED: HWomack DATE: 5/17/2015
TITLE: 3/8" STACK, PALM, 3 POS, DETENT, PULL RTRN, FLOAT CTR SPL, RED KNOB	PART NO.: BKD3GJ	REV.:

THE INFORMATION CONTAINED WITHIN THIS DOCUMENT IS PROPRIETARY TO AAA PRODUCTS AND MAY NOT BE DISCLOSED WITHOUT PRIOR WRITTEN CONSENT

D:\Engineering\Product\Valve\Assembly\Palm\KD\Qg\BKD3GJ.dw