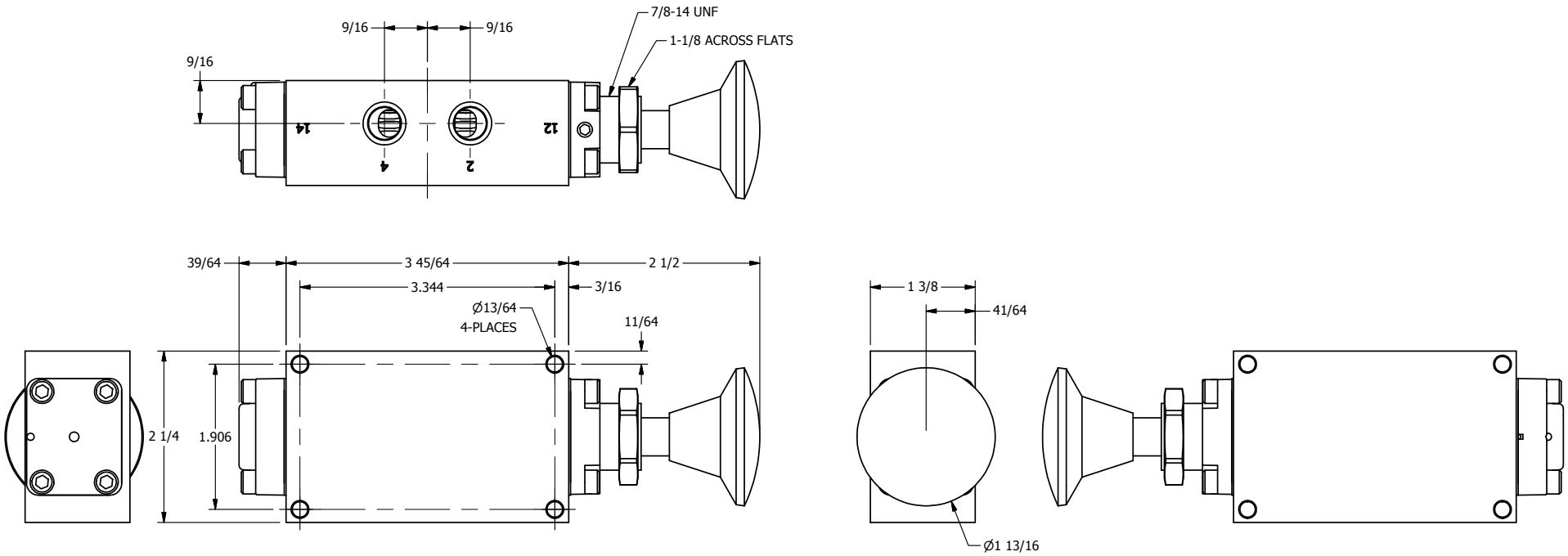

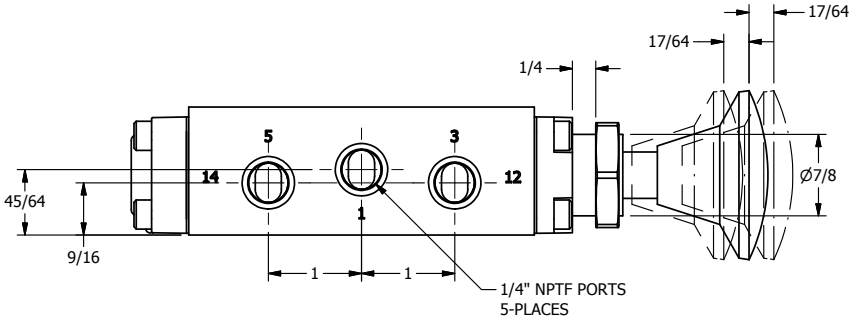

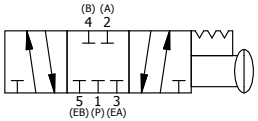

AAA PRODUCTS INTERNATIONAL 7114 Harry Hines Blvd Dallas, TX 75235	TITLE: 1/4" SIDE PORT, PALM, 3 POS, DETENT, PULL RTRN, CLSD CTR SPL, BRASS & SS, RED KNOB, PANEL MNT	PART NO.: DIM_ZKD2JR

THE INFORMATION CONTAINED WITHIN THIS DOCUMENT IS PROPRIETARY TO AAA PRODUCTS AND MAY NOT BE DISCLOSED WITHOUT PRIOR WRITTEN CONSENT