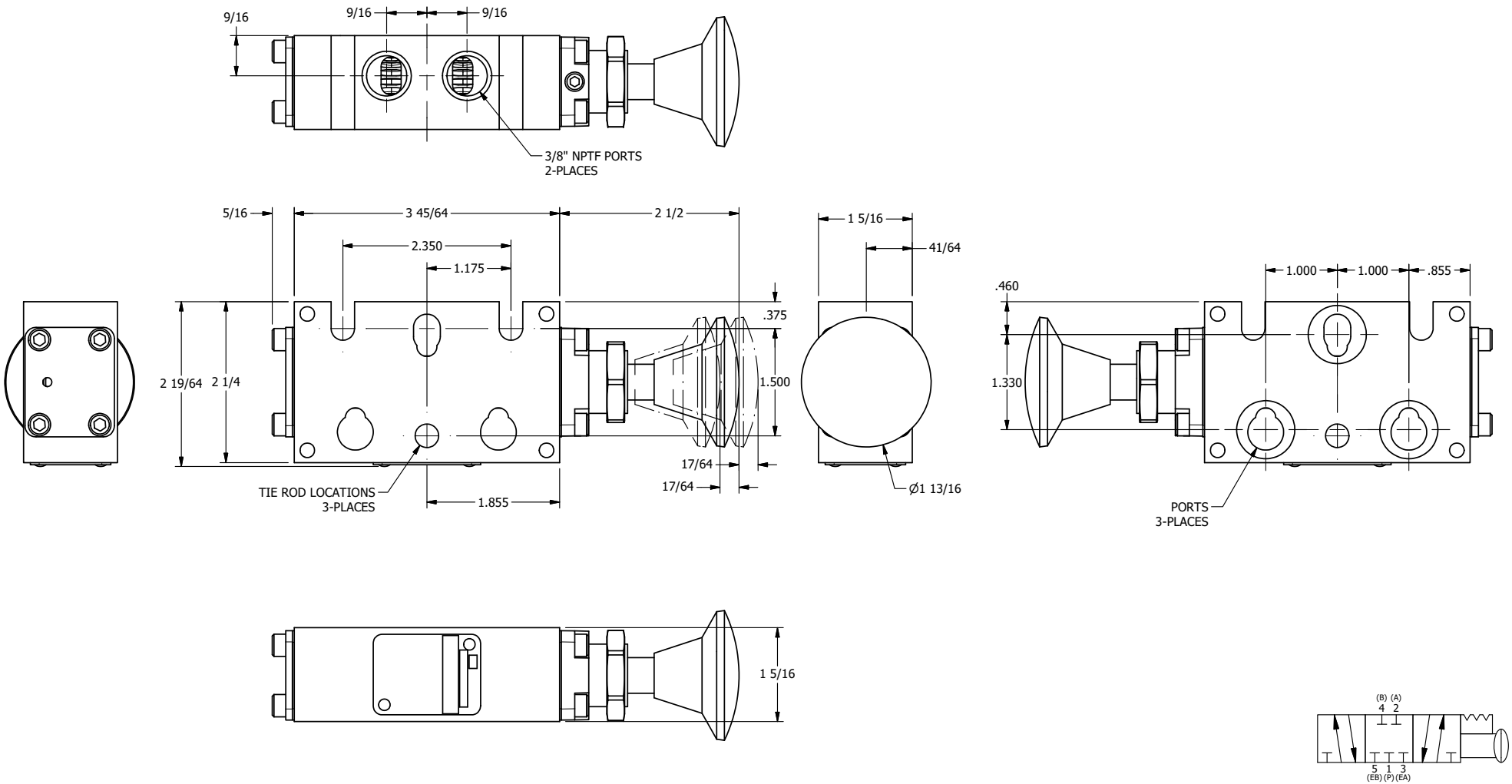

AAA PRODUCTS INTERNATIONAL
7114 Harry Hines Blvd
Dallas, TX 75235

TITLE: 3/8" STACK, PALM, 3 POS, DETENT, PULL RTRN, CLSD CTR SPL, RED KNOB, PANEL MNT

DRAWING NO.: DIM_BKD3JR

THE INFORMATION CONTAINED WITHIN THIS DOCUMENT IS PROPRIETARY TO AAA PRODUCTS AND MAY NOT BE DISCLOSED WITHOUT PRIOR WRITTEN CONSENT