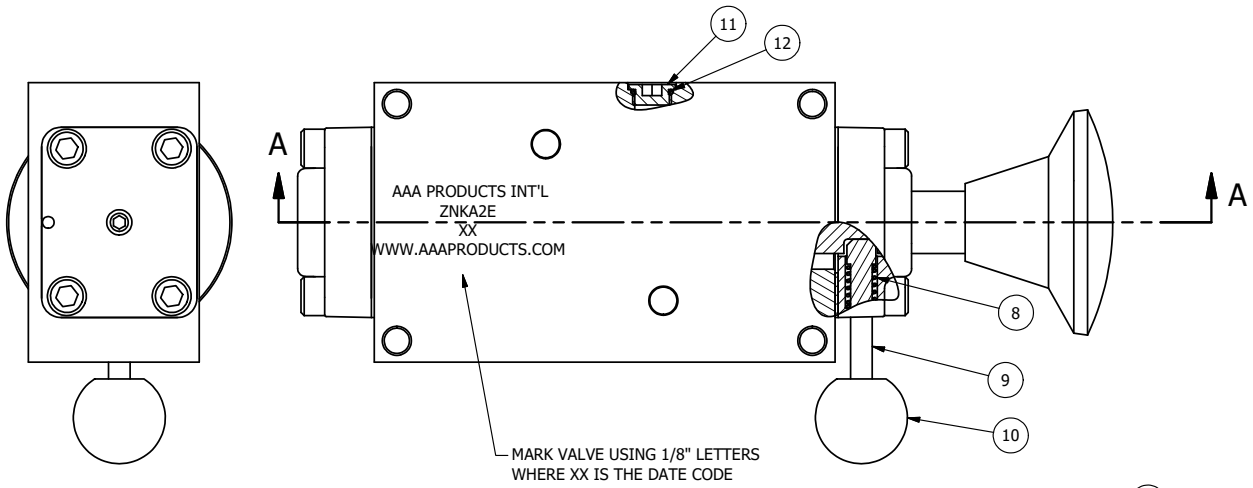

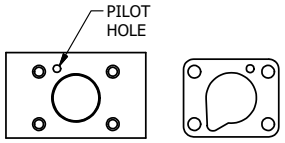

POSITION GASKET TO SEAL PILOT HOLE,
BOTH ENDS (SIDE 'A' SHOWN)

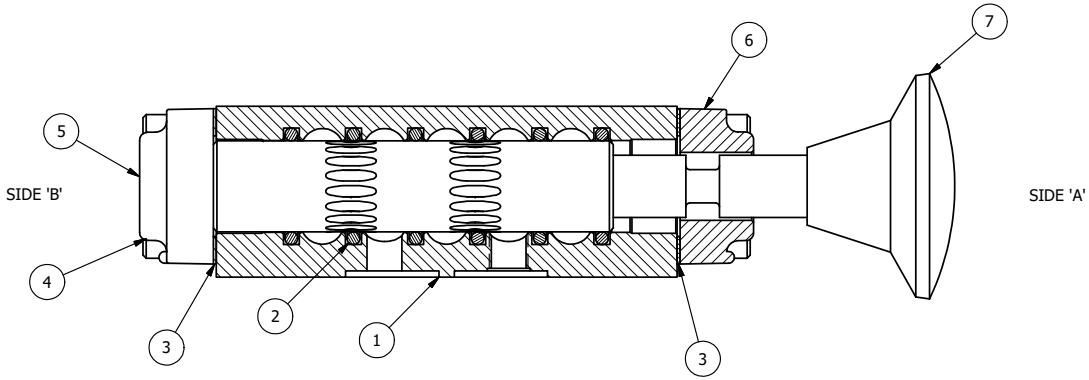

SECTION A-A
SCALE 1 : 1
VIEW FROM 3 PORT SIDE

NOTES:
1) ALWAYS GIVE VALVE MODEL AND PART NUMBER WHEN ORDERING PARTS.
2) LUBRICATE PINLOCK AND SPRING.

FLG	QTY	PART NO	DESCRIPTION
13	1	ZNSPK-2	KIT - SUBPLATE MOUNTING, BRASS NAMUR, (2 EA V-618-SS SCREW, 2 EA V-565 O-RING)
12	1	V-548	O-RING, BUNA-N, 70 DURO, 6MM X 1MM, NAMUR PLUG
11	1	V-547	PLUG, 360 HALF HARD BRASS, NAMUR VALVE
10	1	V-175	KNOB, BLACK, (BRASS 10-32 INSERT), 3/4 DIA BALL, PIN LOCK
9	1	V-315-SS	PIN, PIN LOCK, 303 STAINLESS, 1/4" & 3/8" VALVE
8	1	BBSS-1	SPRING - BUTTON BLEEDER, STAINLESS STEEL, 1/8" NPTF
7	1	V-71	KNOB, BLACK, PALM, (BRASS 5/16-18 INSERT), 1-13/16 DIA X 1-3/8 HEIGHT
6	1	PEC3-10PLL	END CAP, PALM, PIN LOCK, LEFT, STAINLESS STEEL, 1/4" & 3/8" VALVE
5	1	AY-KA3E-SA	ASSY - PINLOCK A, RTRN TO POS A, PALM, 5/16-18 UNC, SS W/AL SPL, 1/4 & 3/8 VALVES
4	8	V-38-SS	SCREW, 10-24 X 3/4, SOCKET HEAD CAP, 18-8 SS
3	2	ECG3	GASKET - END CAP, 1/4" & 3/8" VALVE
2	6	V-39	O-RING, VITON, STD BODY, 1/4" & 3/8" VALVES
1	1	Z2-11	BODY - BRASS, UPPER PILOTS (BUTTON BLEEDER), 1/4" NAMUR

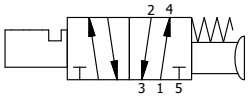

LIMITS ON DIMENSIONS UNLESS OTHERWISE SPECIFIED	2-PL DECIMAL ± .01 3-PL DECIMAL ± .005 FRACTIONAL ± 1/64 ANGULAR ± 1/2'	**AAA PRODUCTS INTERNATIONAL** 7114 Harry Hines Blvd Dallas, TX 75235
DRAWN: RMcKenna DATE: 9/8/2016		CHECKED: KWaite DATE: 9/8/2016
SCALE: 1 : 1 SHEET: 1 OF 1		RELEASED: HWomack DATE: 9/8/2016
TITLE: 1/4" NAMUR, PALM, 2 POS, RVRS SPR RTRN, BRASS & STAINLESS, PINLOCK A	PART NO.: ZNKA2E	REV.:

THE INFORMATION CONTAINED WITHIN THIS DOCUMENT IS PROPRIETARY TO AAA PRODUCTS AND MAY NOT BE DISCLOSED WITHOUT PRIOR WRITTEN CONSENT

D:\Engineering\Product\Valves\Assembly\palm\KA3E\ZNKA2E.dwg