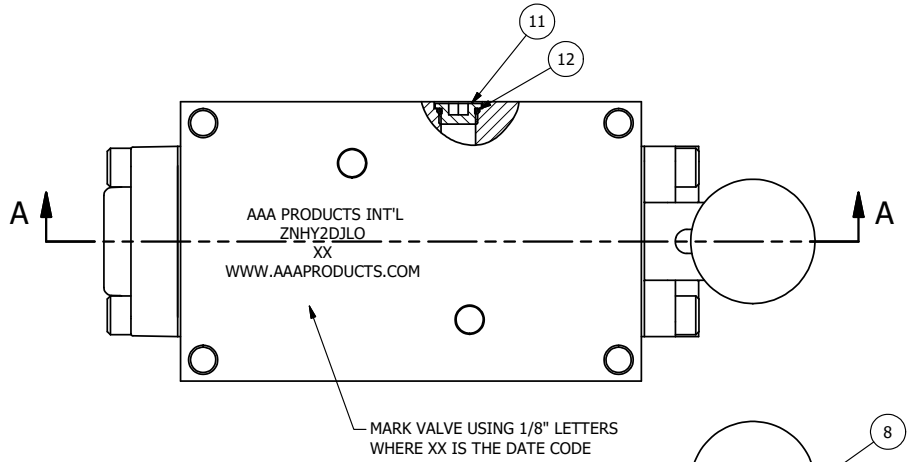

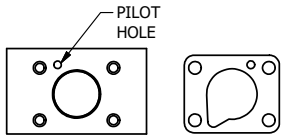

POSITION GASKET TO SEAL PILOT HOLE
BOTH SIDES. (SIDE 'A' SHOWN)

NOTES:
1) ALWAYS GIVE VALVE MODEL, AND PART NUMBER WHEN ORDERING PARTS.
2) USE MASTER LOCK #7LJKAP176 (ORDERED SEPERATELY, #7LJ KEYED ALIKE - KAP176).
3) FOR MULTIPLE LOCKS, USE LOCKOUT HASP LO23 (ORDERED SEPERATELY).

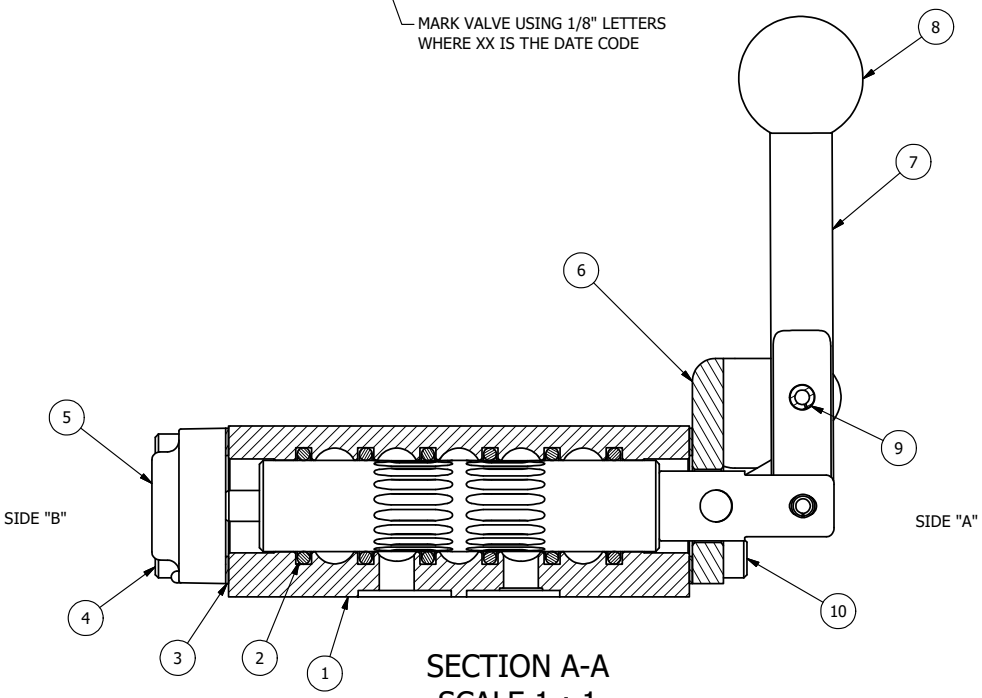

SECTION A-A
SCALE 1 : 1
FROM 3 PORT SIDE

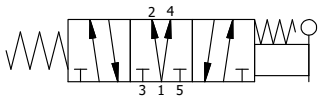

FLG	QTY	PART NO	DESCRIPTION
13	1	ZNSPK-2	KIT - SUBPLATE MOUNTING, BRASS NAMUR, (2 EA V-618-SS SCREW, 2 EA V-565 O-RING)
12	1	V-548	O-RING, BUNA-N, 70 DURO, 6MM X 1MM, NAMUR PLUG
11	1	V-547	PLUG, 360 HALF HARD BRASS, NAMUR VALVE
10	4	V-162-SS	SCREW, 10-24 X 5/8, SOCKET HEAD CAP, STAINLESS STEEL
9	1	V-508-SS	PIN, ROLL 3/16 X 5/8", 18-8 SS
8	1	V-521	KNOB, RED (BRASS 3/8-16 INSERT), 1" DIA BALL, 1/4" & 3/8" VALVE
7	1	HL3-SS	HAND LEVER, 303 STAINLESS STEEL, 1/4" & 3/8" VALVE
6	1	HE3-5LO	END CAP, LEVER, 303 STAINLESS, LOCKOUT, 1/4" & 3/8" VALVES
5	1	AY-HY3DLOB-SA	ASSY - SPR CTR, REGEN CTR SPL, LEVER/TREADLE, SS, W/AL SPL, LO 'B', 1/4 & 3/8 VALVES
4	4	V-38-SS	SCREW, 10-24 X 3/4, SOCKET HEAD CAP, 18-8 SS
3	2	ECG3	GASKET - END CAP, 1/4" & 3/8" VALVE
2	6	V-39	O-RING, VITON, STD BODY, 1/4" & 3/8" VALVES
1	1	Z2-11	BODY - BRASS, UPPER PILOTS (BUTTON BLEEDER), 1/4" NAMUR

LIMITS ON DIMENSIONS UNLESS OTHERWISE SPECIFIED
2-PL DECIMAL ± .01
3-PL DECIMAL ± .005
FRACTIONAL ± 1/64
ANGULAR ± 1/2'

AAA PRODUCTS INTERNATIONAL
7114 Harry Hines Blvd
Dallas, TX 75235

DRAWN: RMcKenna	DATE: 10/11/2018	CHECKED: KWaite	DATE: 10/11/2018
SCALE: None	SHEET: 1 OF 1	RELEASED: HWomack	DATE: 10/11/2018

TITLE:
1/4" NAMUR, LEVER, 3 POS,
SPR CTR, REGEN CTR SPL, BR & SS,
RED KNOB, LOCKOUT B

PART NO.: ZNHY2DJLO

REV.:

D:\ENGINEERING\PRODUCT\VALVES\ASSEMBLY\LS\ER\HY\DWG\ZNHY2DJLO.idw

THE INFORMATION CONTAINED WITHIN THIS DOCUMENT IS PROPRIETARY TO AAA PRODUCTS AND MAY NOT BE DISCLOSED WITHOUT PRIOR WRITTEN CONSENT