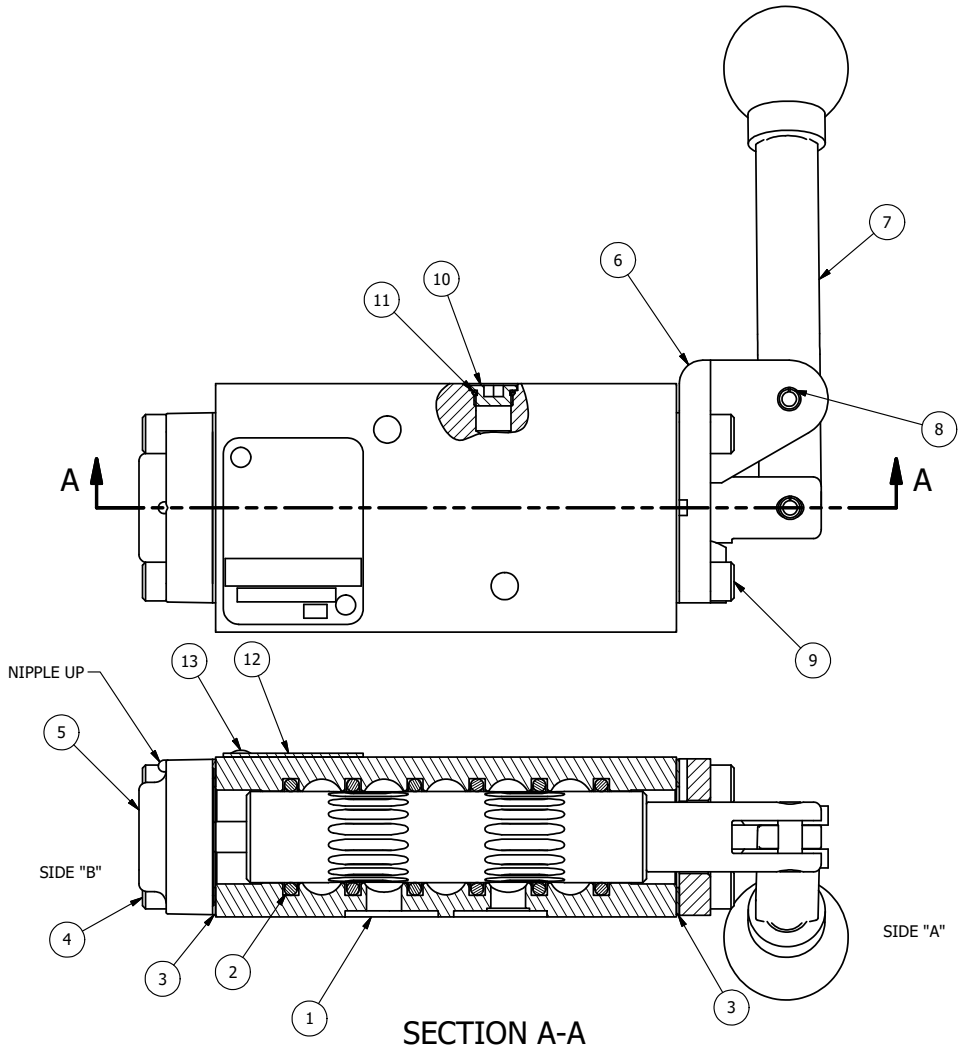

SECTION A-A
SCALE 1 : 1
VIEW FROM 3 PORT SIDE

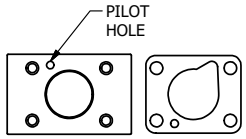

POSITION GASKET TO SEAL PILOT HOLE
BOTH SIDES. (SIDE 'A' SHOWN)

NOTES:
1) ALWAYS GIVE VALVE MODEL, AND PART NUMBER WHEN ORDERING PARTS.

FLG	QTY	PART NO	DESCRIPTION
14	1	NSPK-2	KIT - SUBPLATE MOUNTING, NAMUR VALVES
13	2	V-212	SCREW, #2 X 3/16 DRIVE, TYPE U, OVAL HEAD, STAINLESS STEEL
12	1	AN-114	NAMEPLATE, BLANK, FOR VALVES WITH SPRINGS OR DETENTS
11	1	V-548	O-RING, BUNA-N, 70 DURO, 6MM X 1MM, NAMUR PLUG
10	1	V-547	PLUG, 360 HALF HARD BRASS, NAMUR VALVE
9	4	V-162	SCREW, 10-24 X 5/8, SOCKET HEAD CAP
8	1	V-542	PIN, ROLL 3/16 X 1/2 ZINC PLATED STEEL FOR HE3-4 END CAP
7	1	HL3-24B20	HAND LEVER WITH KNOB, BENT 20 DEG SIDEWAYS, 1/4" & 3/8" VALVES
6	1	HE3-4	ENDCAP - HAND OPERATOR, 303 STAINLESS, 1/4" & 3/8" STACK VALVE
5	1	AY-HY3G	ASSY - SPR CTR, FLOAT CTR SPL, LEVER OR TREADLE, 1/4" & 3/8" VALVES
4	4	V-38	SCREW, 10-24 X 3/4, SOCKET HEAD CAP
3	2	ECG3	GASKET - END CAP, 1/4" & 3/8" VALVE
2	6	V-39	O-RING, VITON, STD BODY, 1/4" & 3/8" VALVES
1	1	B2-11E-W	NAMUR INTERFACE, WITH 3/2 CONVERSION, 1/4" VALVE

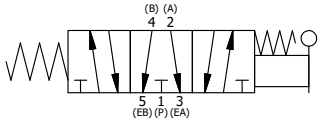

LIMITS ON DIMENSIONS UNLESS OTHERWISE SPECIFIED
2-PL DECIMAL ± .01
3-PL DECIMAL ± .005
FRACTIONAL ± 1/64
ANGULAR ± 1/2'

AAA PRODUCTS INTERNATIONAL
7114 Harry Hines Blvd
Dallas, TX 75235

DRAWN: RMcKenna	DATE: 1/29/2025	CHECKED: KWaite	DATE: 1/29/2025
SCALE: 1 : 1	SHEET: 1 OF 1	RELEASED: HWomack	DATE: 1/29/2025

TITLE:
1/4" NAMUR, LEVER, 3 POS,
SPR FLOAT CTR,
BENT LVR RT, 90D LVR

PART NO.: NHY2GBRR

REV.:

THE INFORMATION CONTAINED WITHIN THIS DOCUMENT IS PROPRIETARY TO AAA PRODUCTS AND MAY NOT BE DISCLOSED WITHOUT PRIOR WRITTEN CONSENT

D:\Engineering\Product\Valves\Assembly\Level1\HY3G\NHY2GBRR.dw