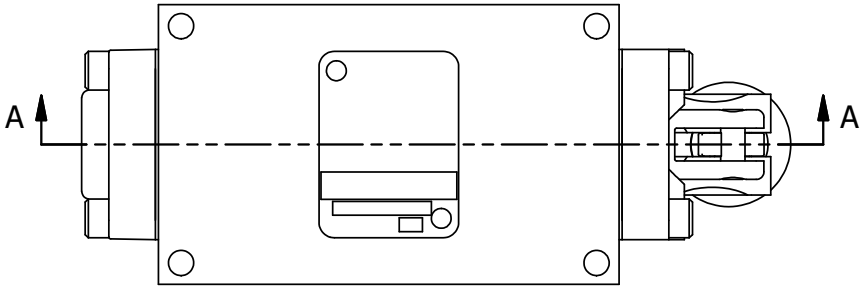

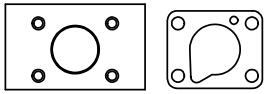

POSITION GASKET ON END OF VALVE SO
MOUNTING HOLES ALIGN
BOTH ENDS (SIDE 'B' SHOWN)

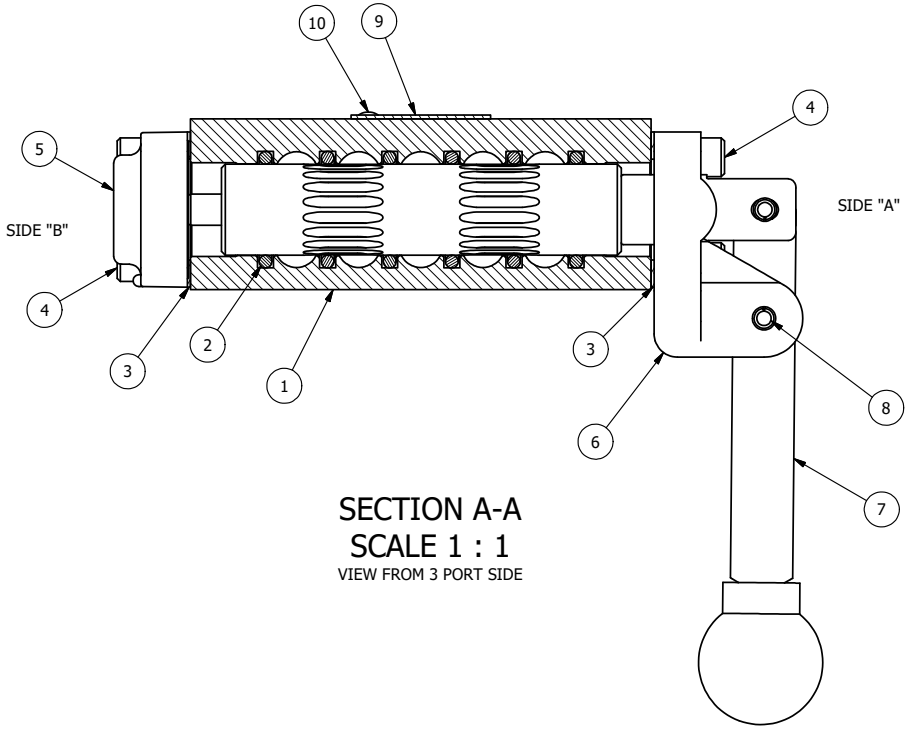

SECTION A-A
SCALE 1 : 1
VIEW FROM 3 PORT SIDE

NOTES:
1) ALWAYS GIVE VALVE MODEL, AND PART NUMBER WHEN ORDERING PARTS.

FLG	QTY	PART NO	DESCRIPTION
10	2	V-212	SCREW, #2 X 3/16 DRIVE, TYPE U, OVAL HEAD, STAINLESS STEEL
9	1	AN-114	NAMEPLATE, BLANK, FOR VALVES WITH SPRINGS OR DETENTS
8	1	V-7	PIN, ROLL 3/16 X 11/16, STEEL, FOR 1/4 THRU 1/2" HAND,FT & CAM V
7	1	HL3-24	HAND LEVER WITH KNOB, 1/4" & 3/8" VALVE
6	1	HE3-1	END CAP, LEVER, 380 AL, 1/4" & 3/8" VALVE
5	1	AY-HY3G	ASSY - SPR CTR, FLOAT CTR SPL, LEVER OR TREADLE, 1/4" & 3/8" VALVES
4	8	V-38	SCREW, 10-24 X 3/4, SOCKET HEAD CAP
3	2	ECG3	GASKET - END CAP, 1/4" & 3/8" VALVE
2	6	V-39	O-RING, VITON, STD BODY, 1/4" & 3/8" VALVES
1	1	B2-2E	BODY - SOLID, PLAIN, NO PILOTS, ANODIZED, 1/4" SIDE PORT VALVE

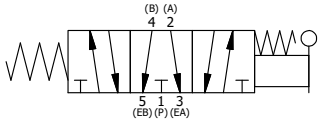

LIMITS ON DIMENSIONS UNLESS OTHERWISE SPECIFIED	2-PL DECIMAL ± .01 3-PL DECIMAL ± .005 FRACTIONAL ± 1/64 ANGULAR ± 1/2'	AAA PRODUCTS INTERNATIONAL 7114 Harry Hines Blvd Dallas, TX 75235	
DRAWN: RMcKenna	DATE: 9/16/2015	CHECKED: KWaite	DATE: 9/16/2015
SCALE: 1 : 1	SHEET: 1 OF 1	RELEASED: HWomack	DATE: 9/16/2015
TITLE: 1/4" SIDE PORT, LEVER, 3 POS, SPR CTR, LEVER SHFT, FLOAT CTR SPL, 180D LEVER		PART NO.: HY2GT	REV.:

THE INFORMATION CONTAINED WITHIN THIS DOCUMENT IS PROPRIETARY TO AAA PRODUCTS AND MAY NOT BE DISCLOSED WITHOUT PRIOR WRITTEN CONSENT

D:\Engineering\Product\Valve\Assembly\Level\HY3G\HY2G1.dw