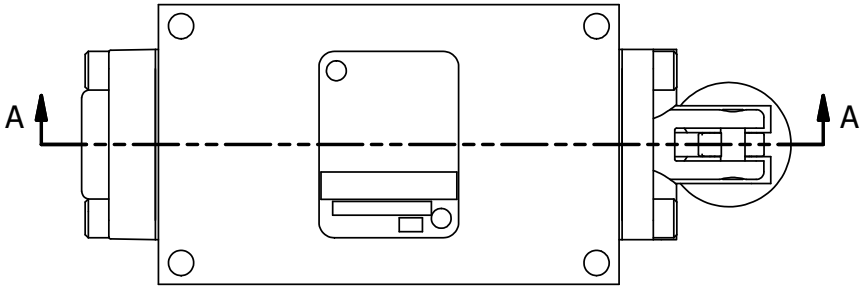

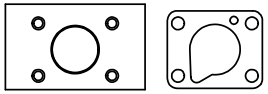

POSITION GASKET ON END OF VALVE SO
MOUNTING HOLES ALIGN
BOTH ENDS (SIDE 'B' SHOWN)

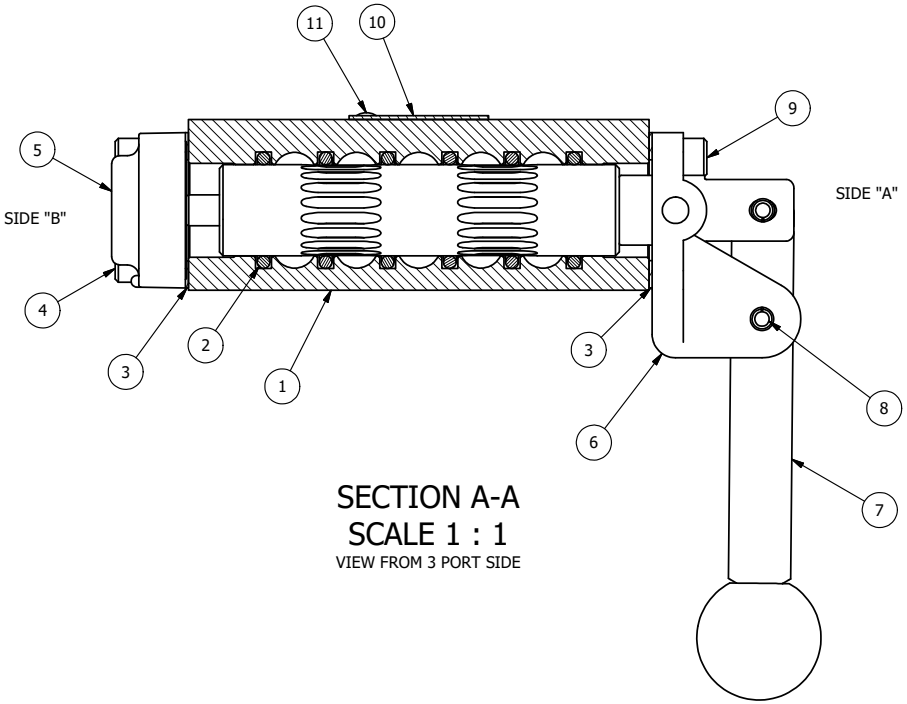

SECTION A-A
SCALE 1 : 1
VIEW FROM 3 PORT SIDE

NOTES:
1) ALWAYS GIVE VALVE MODEL, AND PART NUMBER WHEN ORDERING PARTS.

FLG	QTY	PART NO	DESCRIPTION
11	2	V-212	SCREW, #2 X 3/16 DRIVE, TYPE U, OVAL HEAD, STAINLESS STEEL
10	1	AN-114	NAMEPLATE, BLANK, FOR VALVES WITH SPRINGS OR DETENTS
9	4	V-162	SCREW, 10-24 X 5/8, SOCKET HEAD CAP
8	1	V-508	PIN, ROLL 3/16 X 5/8 ZINC PLATED STEEL FOR 1/4 FOOT ENDCAP
7	1	HL3-521	HAND LEVER WITH RED KNOB, 1/4" & 3/8" VALVE
6	1	HE3-5	END CAP, LEVER, 303 STAINLESS, 1/4" & 3/8" VALVE
5	1	AY-HY3G	ASSY - SPR CTR, FLOAT CTR SPL, LEVER OR TREADLE, 1/4" & 3/8" VALVES
4	4	V-38	SCREW, 10-24 X 3/4, SOCKET HEAD CAP
3	2	ECG3	GASKET - END CAP, 1/4" & 3/8" VALVE
2	6	V-39	O-RING, VITON, STD BODY, 1/4" & 3/8" VALVES
1	1	B2-2E	BODY - SOLID, PLAIN, NO PILOTS, ANODIZED, 1/4" SIDE PORT VALVE

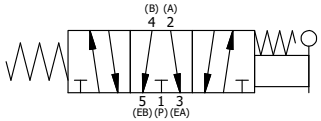

LIMITS ON DIMENSIONS UNLESS OTHERWISE SPECIFIED	2-PL DECIMAL ± .01 3-PL DECIMAL ± .005 FRACTIONAL ± 1/64 ANGULAR ± 1/2'	AAA PRODUCTS INTERNATIONAL 7114 Harry Hines Blvd Dallas, TX 75235	
DRAWN: RMcKenna	DATE: 1/29/2025	CHECKED: KWaite	DATE: 1/29/2025
SCALE: 1 : 1	SHEET: 1 OF 1	RELEASED: HWomack	DATE: 1/29/2025
TITLE: 1/4" SIDE PORT, LEVER, 3 POS, SPR FLOAT CTR, HVY DTY, RED KNOB, 180D LVR		PART NO.: HY2GHJT	REV.:

THE INFORMATION CONTAINED WITHIN THIS DOCUMENT IS PROPRIETARY TO AAA PRODUCTS AND MAY NOT BE DISCLOSED WITHOUT PRIOR WRITTEN CONSENT

D:\Engineering\Product\Valves\Assembly\level1\HY3G\HY2GHJT.idw