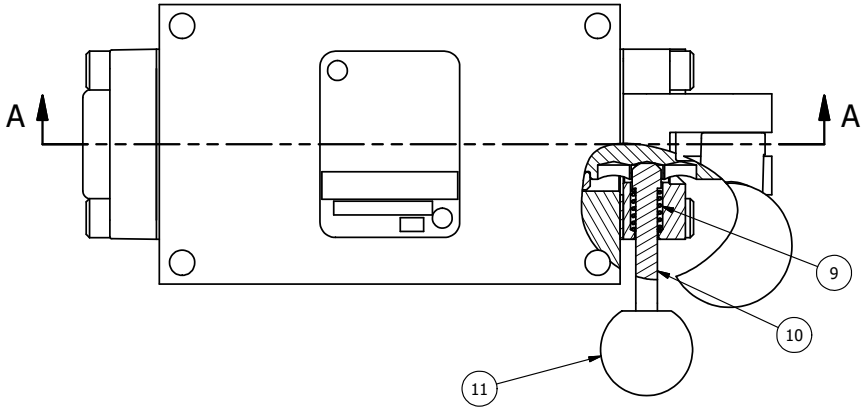

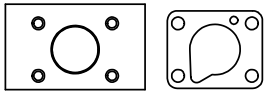

POSITION GASKET ON END OF VALVE SO
MOUNTING HOLES ALIGN
BOTH ENDS (SIDE 'B' SHOWN)

NOTES:
1) ALWAYS GIVE VALVE MODEL, AND PART NUMBER WHEN ORDERING PARTS.

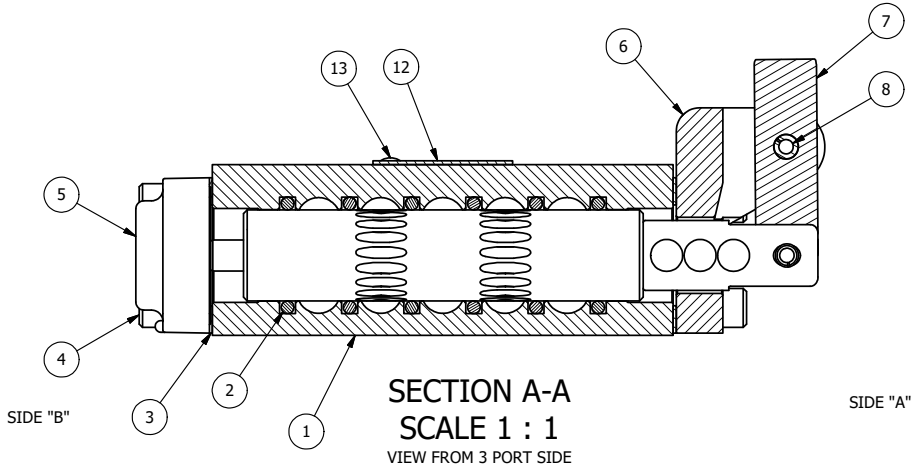

SECTION A-A
SCALE 1 : 1
VIEW FROM 3 PORT SIDE

FLG	QTY	PART NO	DESCRIPTION
13	2	V-212	SCREW, #2 X 3/16 DRIVE, TYPE U, OVAL HEAD, STAINLESS STEEL
12	1	AN-114	NAMEPLATE, BLANK, FOR VALVES WITH SPRINGS OR DETENTS
11	1	V-175	KNOB, BLACK, (BRASS 10-32 INSERT), 3/4 DIA BALL, PIN LOCK
10	1	V-315-SS	PIN, PIN LOCK, 303 STAINLESS, 1/4" & 3/8" VALVE
9	1	BBSS-1	SPRING - BUTTON BLEEDER, STAINLESS STEEL, 1/8" NPTF
8	1	V-7	PIN, ROLL 3/16 X 11/16, STEEL, FOR 1/4 THRU 1/2" HAND,FT & CAM V
7	1	HL3-24B20	HAND LEVER WITH KNOB, BENT 20 DEG SIDEWAYS, 1/4" & 3/8" VALVES
6	1	HE3-3PLL	END CAP, LEVER, PIN LOCK, LEFT, 380 AL, 1/4" & 3/8" VALVE
5	1	AY-HY3E	ASSY - SPR CTR, CLSD CTR SPL, LEVER OR TREADLE, PINLOCK ABC, 1/4 & 3/8 VALVES
4	8	V-38	SCREW, 10-24 X 3/4, SOCKET HEAD CAP
3	2	ECG3	GASKET - END CAP, 1/4" & 3/8" VALVE
2	6	V-39	O-RING, VITON, STD BODY, 1/4" & 3/8" VALVES
1	1	B2-2E	BODY - SOLID, PLAIN, NO PILOTS, ANODIZED, 1/4" SIDE PORT VALVE

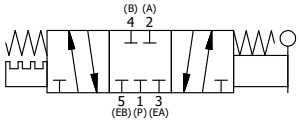

LIMITS ON DIMENSIONS UNLESS OTHERWISE SPECIFIED	2-PL DECIMAL ± .01 3-PL DECIMAL ± .005 FRACTIONAL ± 1/64 ANGULAR ± 1/2'	AAA PRODUCTS INTERNATIONAL	**AAA PRODUCTS INTERNATIONAL** **7114 Harry Hines Blvd** **Dallas, TX 75235**
DRAWN: RMcKenna	DATE: 6/6/2022	CHECKED: KWaite	DATE: 6/6/2022
SCALE: 1 : 1	SHEET: 1 OF 1	RELEASED: HWomack	DATE: 6/6/2022
TITLE: 1/4" SIDE PORT, LEVER, 3 POS, PIN LOCK ABC, SPR CTR, CLSD CTR SPL, BENT LVR LFT		PART NO.: HY2BLE	REV.:

THE INFORMATION CONTAINED WITHIN THIS DOCUMENT IS PROPRIETARY TO AAA PRODUCTS AND MAY NOT BE DISCLOSED WITHOUT PRIOR WRITTEN CONSENT

D:\Engineering\Product\Valves\Assembly\Lever\HY3D\GH\HY2BLE.dw