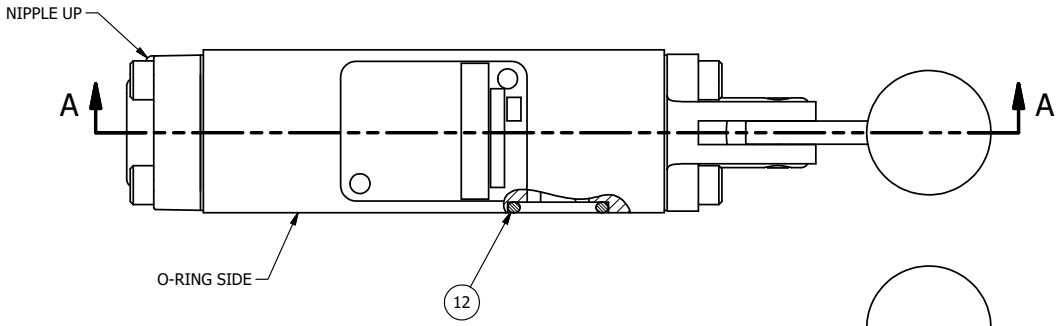

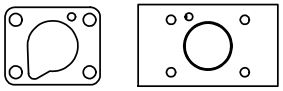

POSITION GASKET ON END OF VALVE
TO SEAL PILOT HOLE IF PRESENT,
BOTH SIDES (SIDE 'B' SHOWN)

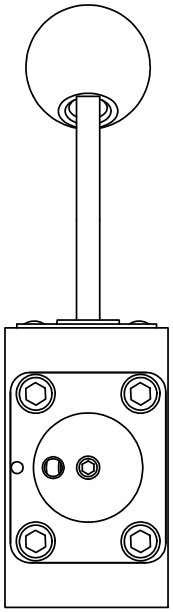

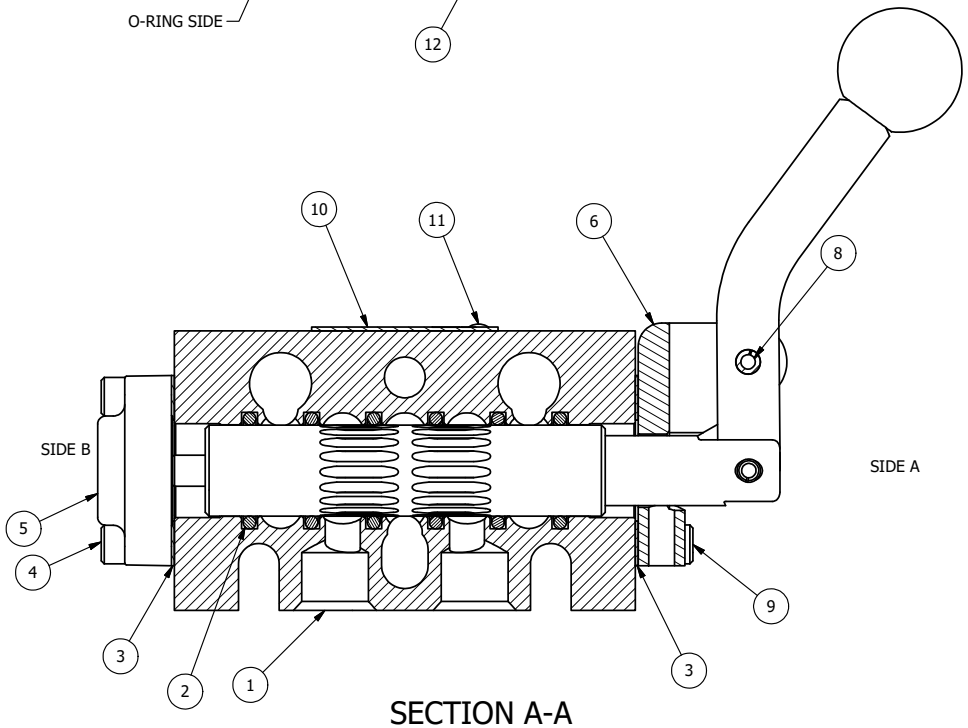

SECTION A-A
SCALE 1 : 1

NOTES:
1) ALWAYS GIVE VALVE MODEL AND PART NUMBER WHEN ORDERING PARTS.

FLG	QTY	PART NO	DESCRIPTION
12	3	V-110	O-RING, BUNA-N, 70 DURO, AS-114, (REF 5/8 X 13/16 X 3/32), 1/4" SLEEVE, 1/2" SUB, STACK
11	2	V-212	SCREW, #2 X 3/16 DRIVE, TYPE U, OVAL HEAD, STAINLESS STEEL
10	1	AN-114	NAMEPLATE, BLANK, FOR VALVES WITH SPRINGS OR DETENTS
9	4	V-162	SCREW, 10-24 X 5/8, SOCKET HEAD CAP
8	1	V-542	PIN, ROLL 3/16 X 1/2 ZINC PLATED STEEL FOR HE3-4 END CAP
7	1	HL3-521C	CURVED HAND LEVER WITH RED KNOB, 1/4" & 3/8" VALVE
6	1	HE3-4	ENDCAP - HAND OPERATOR, 303 STAINLESS, 1/4" & 3/8" STACK VALVE
5	1	AY-BHY3D	ASSY - SPR CTR, REGEN CTR SPL, HAND/FOOT, 1/4" & 3/8" STACK VALVES
4	4	V-38	SCREW, 10-24 X 3/4, SOCKET HEAD CAP
3	2	ECG3	GASKET - END CAP, 1/4" & 3/8" VALVE
2	6	V-39	O-RING, VITON, STD BODY, 1/4" & 3/8" VALVES
1	1	B3-10E	FINISHED - SOLID BODY, UPPER PILOTS, 3/8" STACKING VALVE

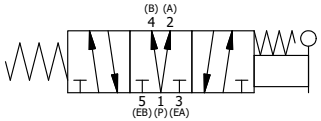

LIMITS ON DIMENSIONS UNLESS OTHERWISE SPECIFIED
2-PL DECIMAL ± .01
3-PL DECIMAL ± .005
FRACTIONAL ± 1/64
ANGULAR ± 1/2'

AAA PRODUCTS INTERNATIONAL
7114 Harry Hines Blvd
Dallas, TX 75235

DRAWN: RMcKenna DATE: 1/29/2025
CHECKED: KWaite DATE: 1/29/2025
SCALE: 1 : 1 SHEET: 1 OF 1
RELEASED: HWomack DATE: 1/29/2025

TITLE: 3/8" STACK, LEVER, 3 POS, SPR REGEN CTR, CURVED LVR, RED KNOB

PART NO.: BHY3DCJ

REV.:

THE INFORMATION CONTAINED WITHIN THIS DOCUMENT IS PROPRIETARY TO AAA PRODUCTS AND MAY NOT BE DISCLOSED WITHOUT PRIOR WRITTEN CONSENT

D:\Engineering\Product\Valves\Assembly\Level1\HY\SW\G\BHY3DCJ.dw