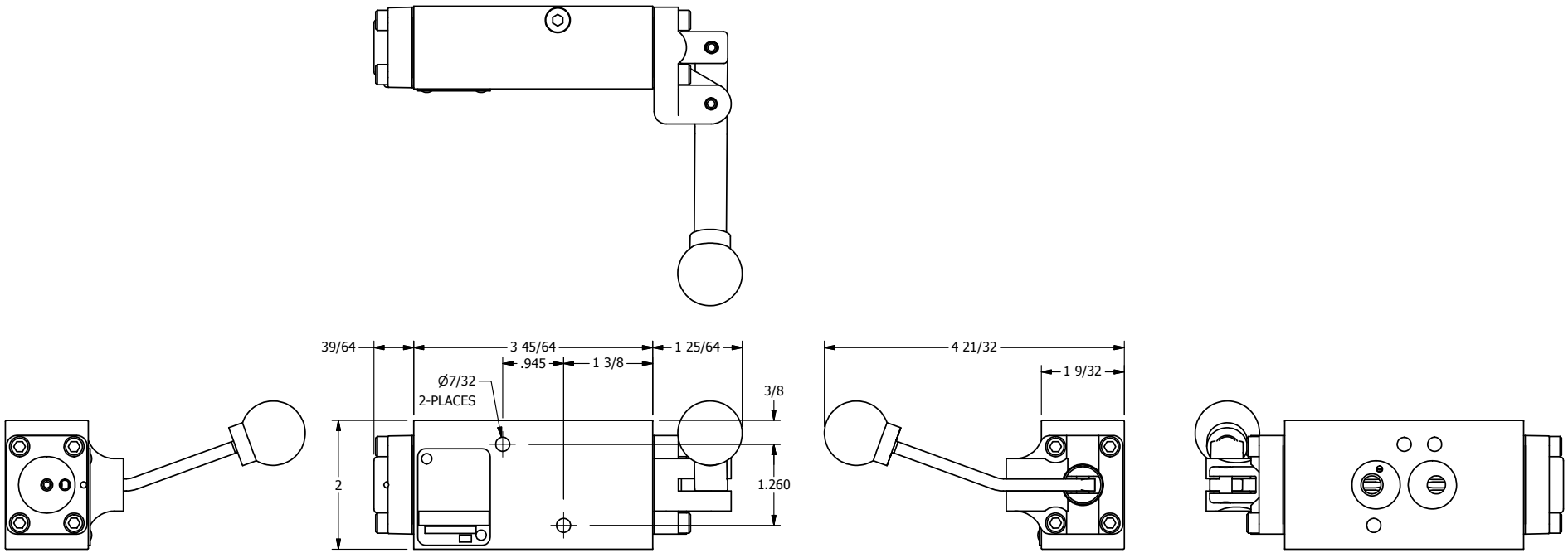

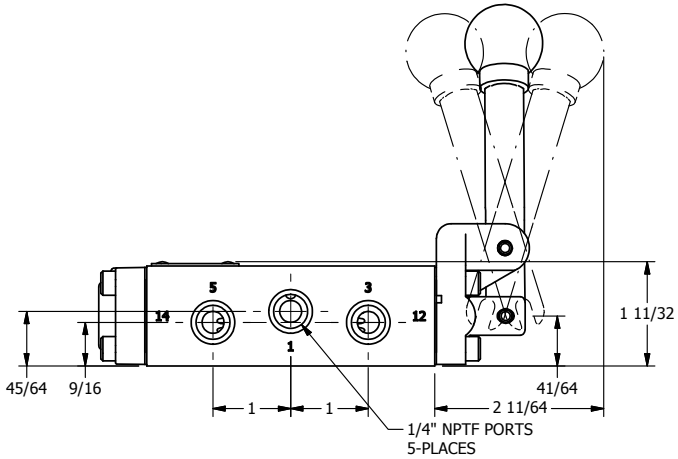

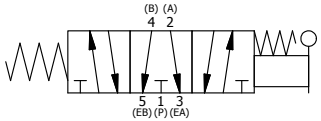

AAA PRODUCTS INTERNATIONAL 7114 Harry Hines Blvd Dallas, TX 75235	TITLE: 1/4" NAMUR, LEVER, 3 POS, SPR CTR, LEVER SHFT, FLOAT CTR SPL, BENT LEVER RIGHT	PART NO.: DIM_NHY2GBR

THE INFORMATION CONTAINED WITHIN THIS DOCUMENT IS PROPRIETARY TO AAA PRODUCTS AND MAY NOT BE DISCLOSED WITHOUT PRIOR WRITTEN CONSENT