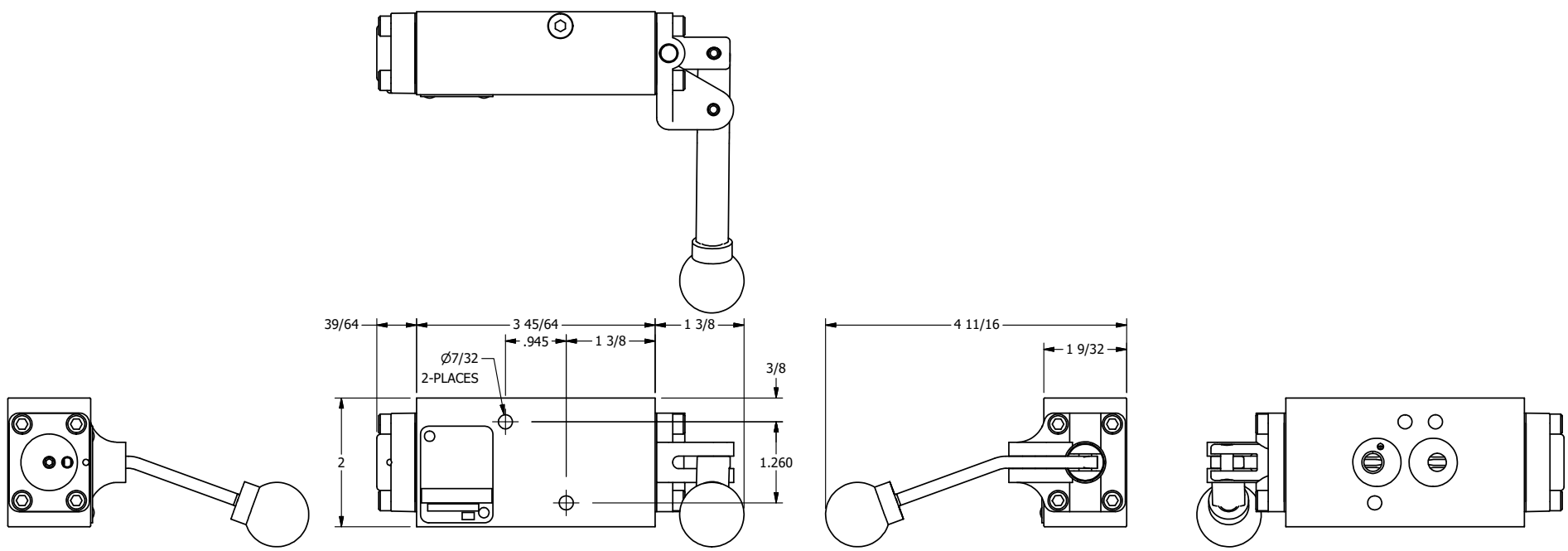

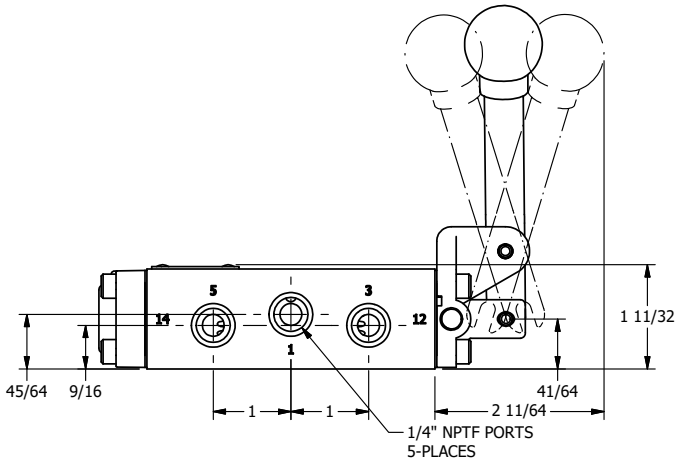

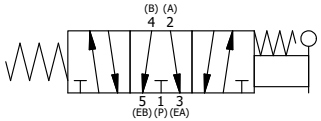

AAA PRODUCTS INTERNATIONAL
7114 Harry Hines Blvd
Dallas, TX 75235

TITLE: 1/4" NAMUR, LEVER, 3 POS, SPR FLOAT CTR, BNT LVR LFT, HVY DTY, LOCKOUT B

DRAWING NO.: DIM_NHY2GBLHLO

THE INFORMATION CONTAINED WITHIN THIS DOCUMENT IS PROPRIETARY TO AAA PRODUCTS AND MAY NOT BE DISCLOSED WITHOUT PRIOR WRITTEN CONSENT