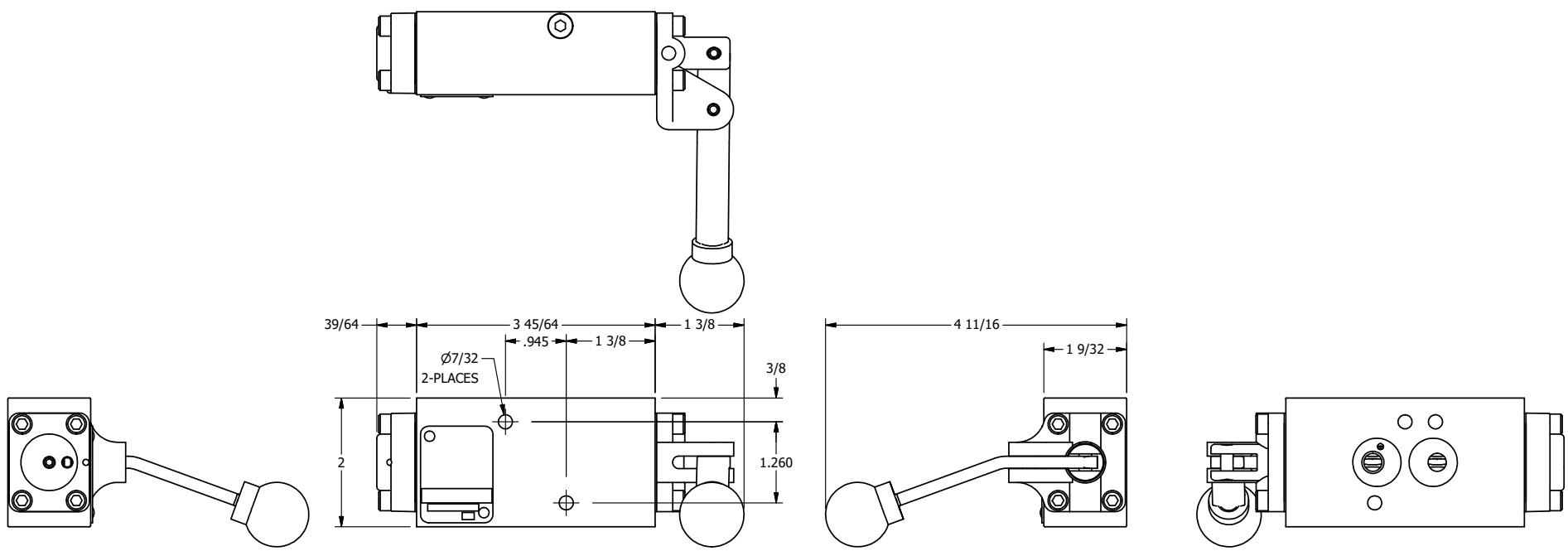


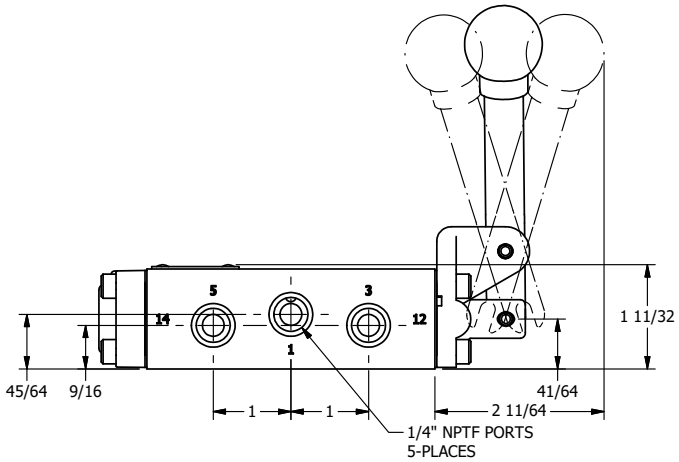


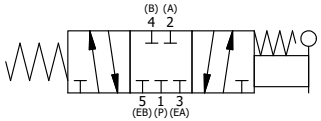


**AAA PRODUCTS INTERNATIONAL**
7114 Harry Hines Blvd
Dallas, TX 75235

TITLE: 1/4" NAMUR, LEVER, 3 POS, SPR CTR, LEVER SHFT, CLSD CTR SPL, BENT LVR LFT, HVY DUTY

DRAWING NO.: DIM_NHY2BLH

THE INFORMATION CONTAINED WITHIN THIS DOCUMENT IS PROPRIETARY TO AAA PRODUCTS AND MAY NOT BE DISCLOSED WITHOUT PRIOR WRITTEN CONSENT