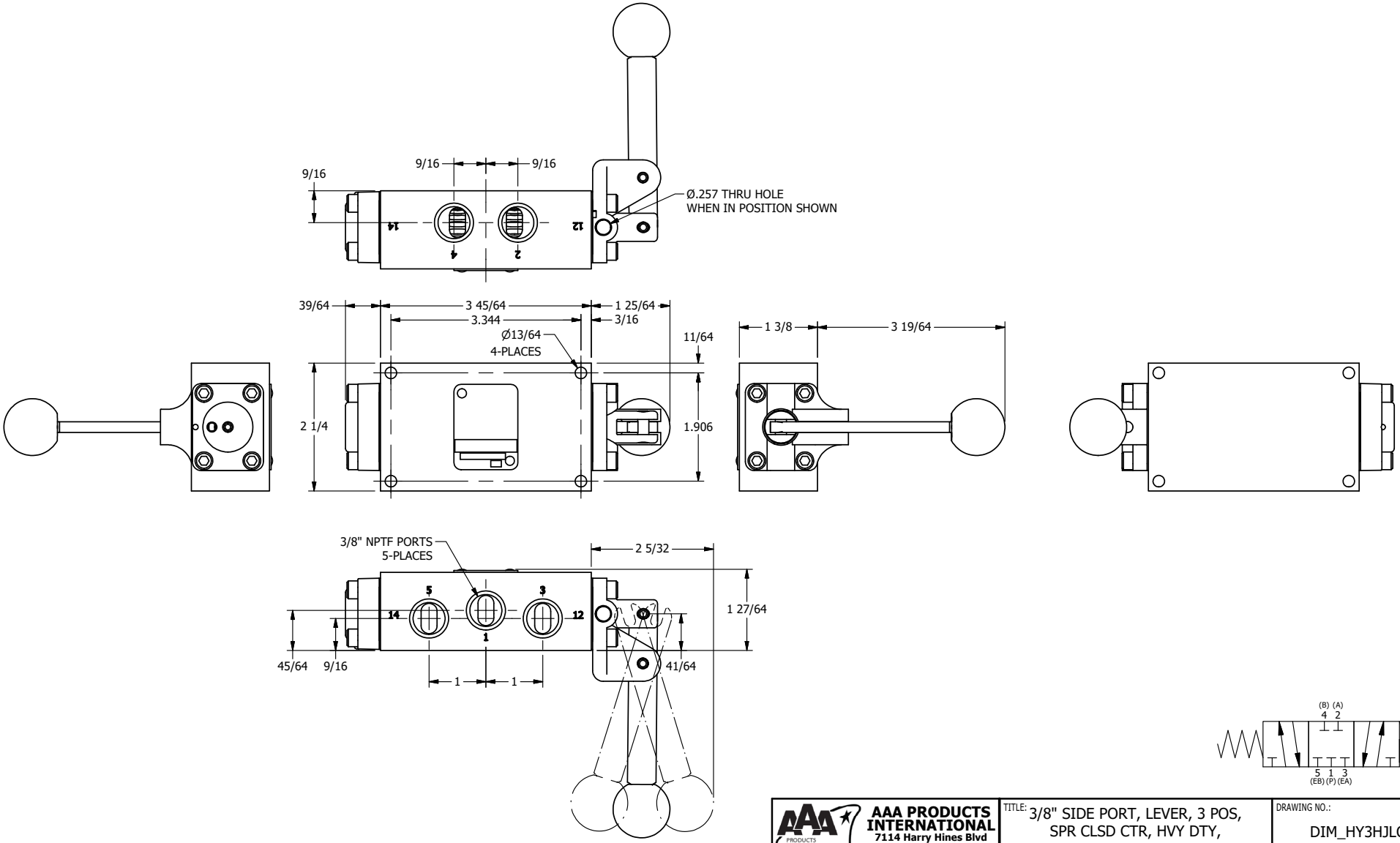

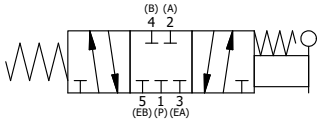

AAA PRODUCTS INTERNATIONAL 7114 Harry Hines Blvd Dallas, TX 75235	TITLE: 3/8" SIDE PORT, LEVER, 3 POS, SPR CLSD CTR, HVY DTY, RED KNOB, LOCKOUT B, 180D LVR	DRAWING NO.: DIM_HY3HJLOT

THE INFORMATION CONTAINED WITHIN THIS DOCUMENT IS PROPRIETARY TO AAA PRODUCTS AND MAY NOT BE DISCLOSED WITHOUT PRIOR WRITTEN CONSENT