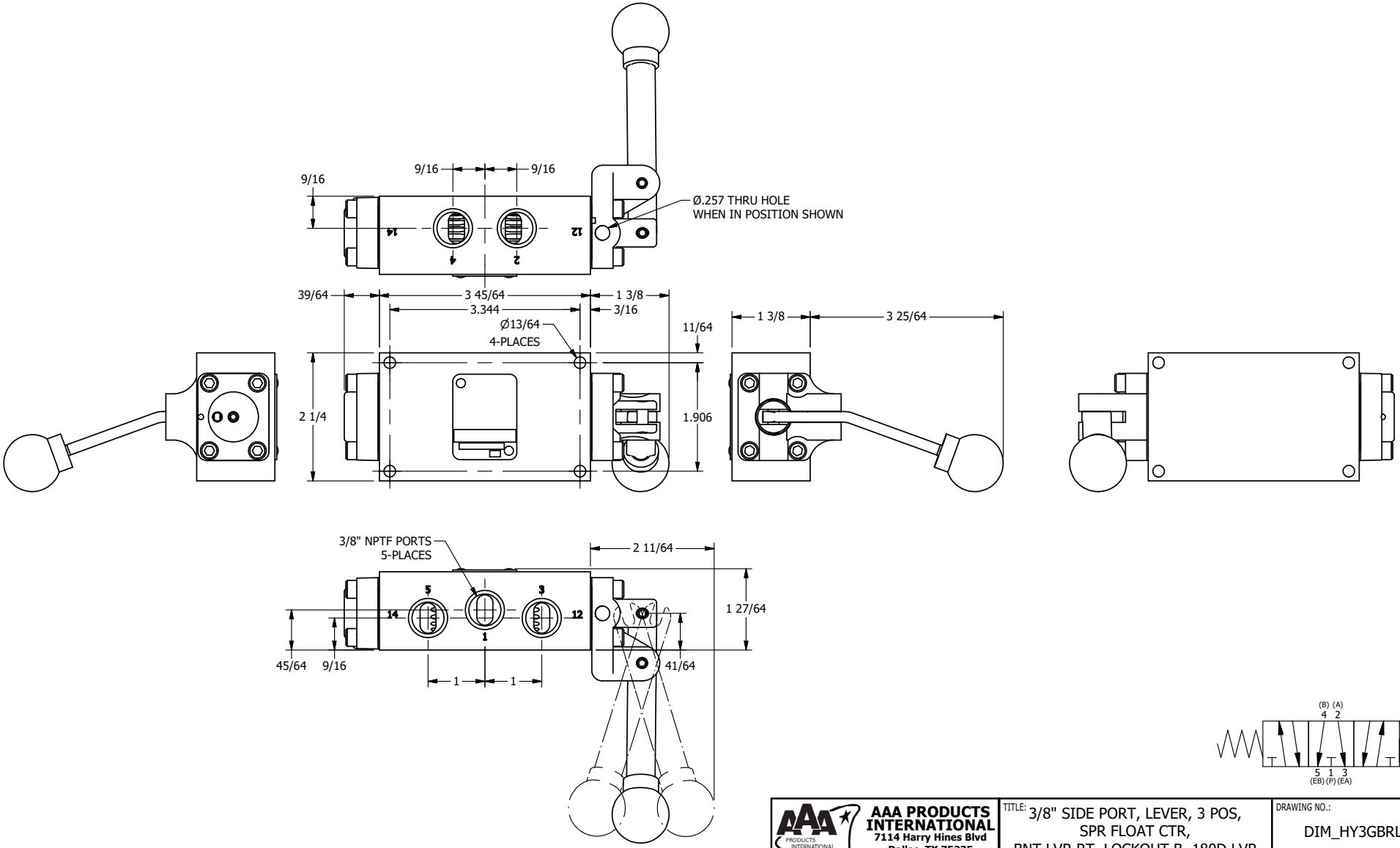

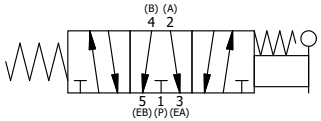

AAA PRODUCTS INTERNATIONAL 7114 Harry Hines Blvd Dallas, TX 75235	TITLE: 3/8" SIDE PORT, LEVER, 3 POS, SPR FLOAT CTR, BNT LVR RT, LOCKOUT B, 180D LVR	DRAWING NO.: DIM_HY3GBRLOT

THE INFORMATION CONTAINED WITHIN THIS DOCUMENT IS PROPRIETARY TO AAA PRODUCTS AND MAY NOT BE DISCLOSED WITHOUT PRIOR WRITTEN CONSENT