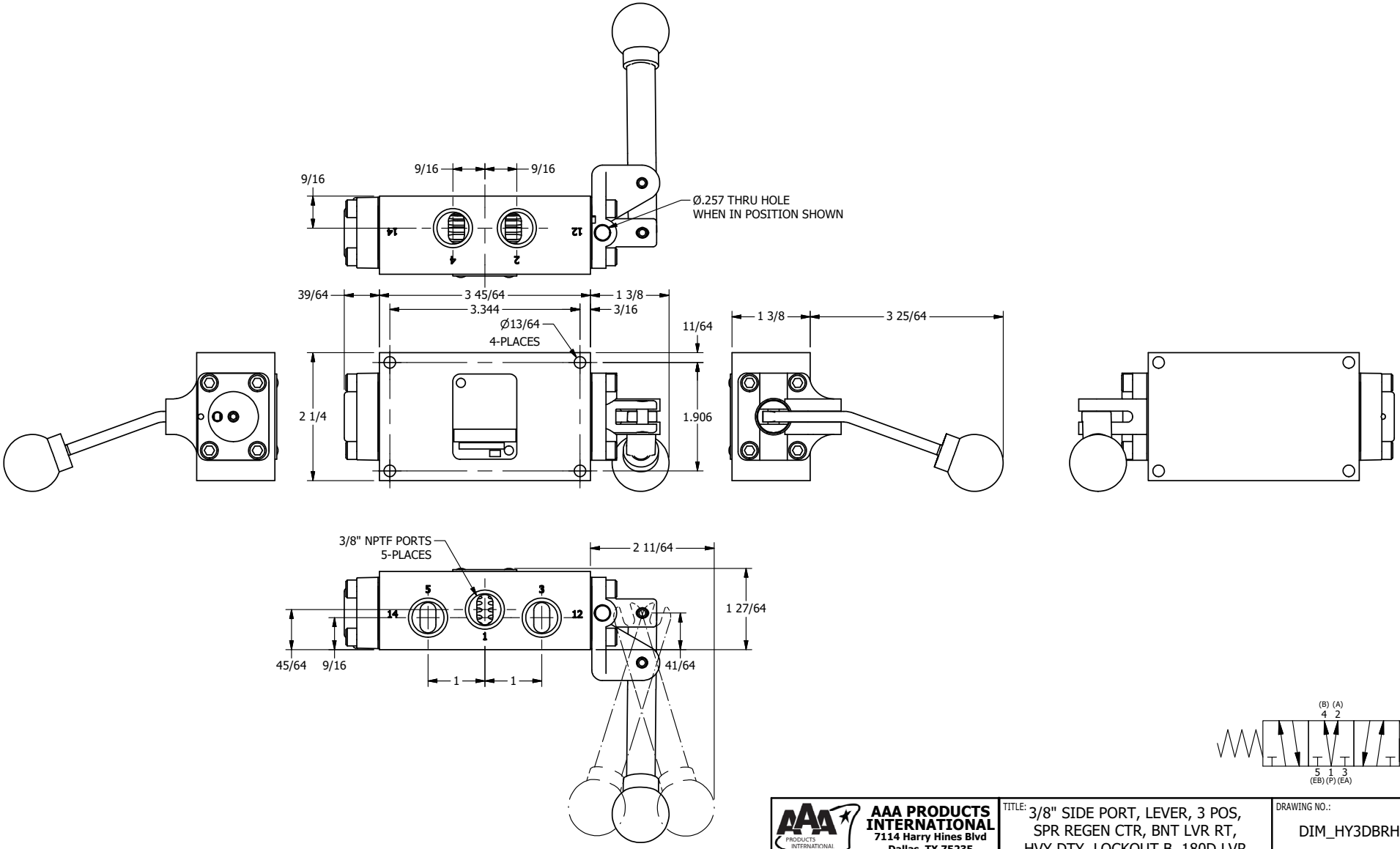

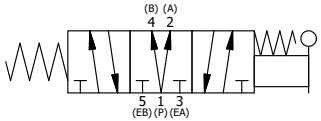

AAA PRODUCTS INTERNATIONAL
7114 Harry Hines Blvd
Dallas, TX 75235

TITLE: 3/8" SIDE PORT, LEVER, 3 POS, SPR REGEN CTR, BNT LVR RT, HVY DTY, LOCKOUT B, 180D LVR

DRAWING NO.: DIM_HY3DBRHLOT

THE INFORMATION CONTAINED WITHIN THIS DOCUMENT IS PROPRIETARY TO AAA PRODUCTS AND MAY NOT BE DISCLOSED WITHOUT PRIOR WRITTEN CONSENT