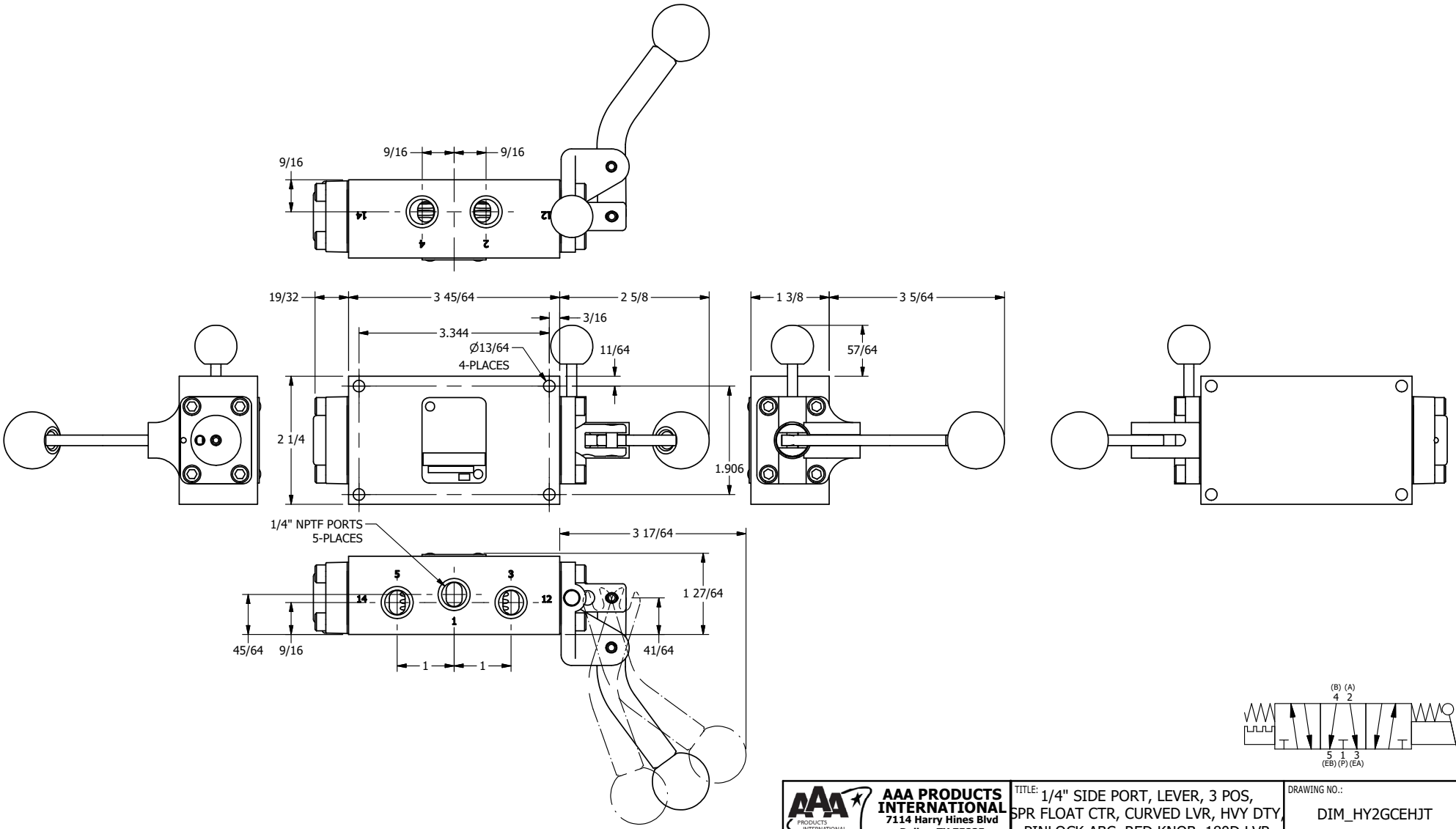

AAA PRODUCTS INTERNATIONAL
7114 Harry Hines Blvd
Dallas, TX 75235

TITLE: 1/4" SIDE PORT, LEVER, 3 POS, SPR FLOAT CTR, CURVED LVR, HVY DTY, PINLOCK ABC, RED KNOB, 180D LVR

DRAWING NO.: DIM_HY2GCEHJT

THE INFORMATION CONTAINED WITHIN THIS DOCUMENT IS PROPRIETARY TO AAA PRODUCTS AND MAY NOT BE DISCLOSED WITHOUT PRIOR WRITTEN CONSENT