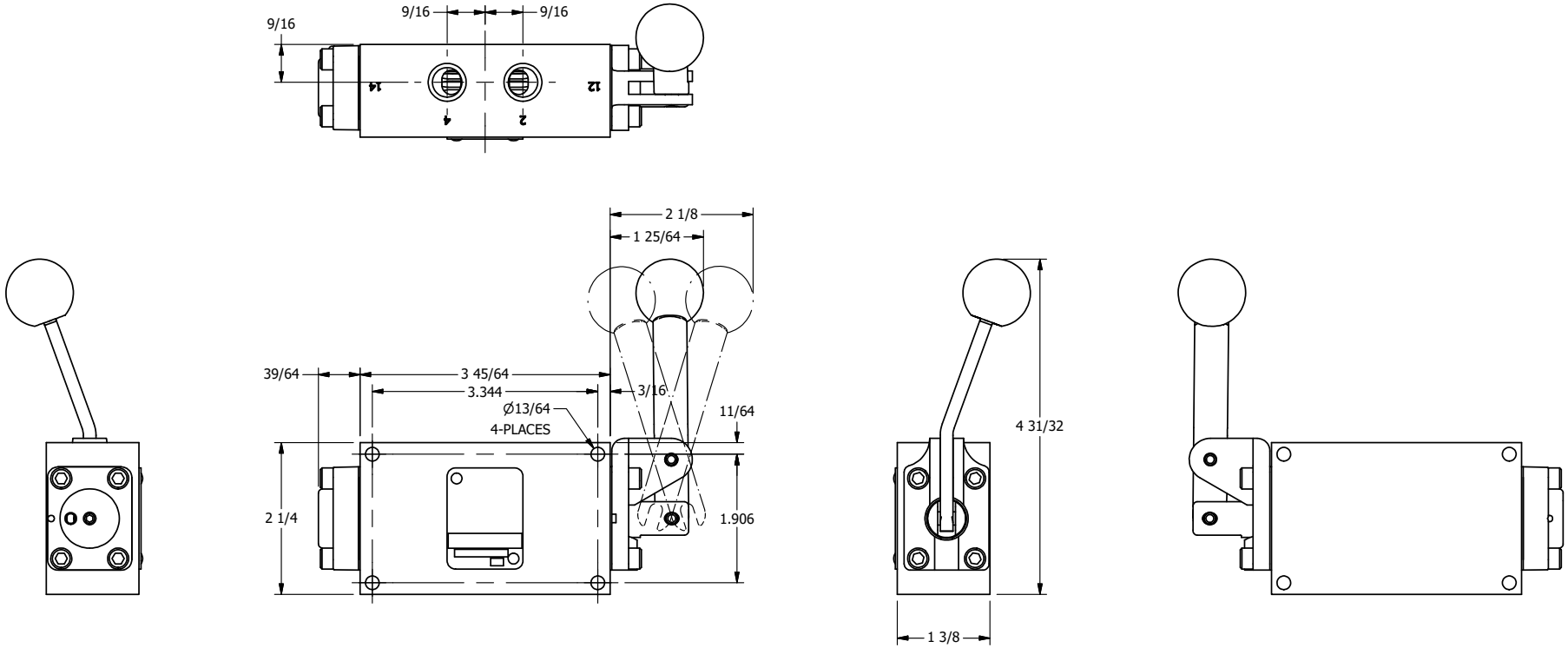


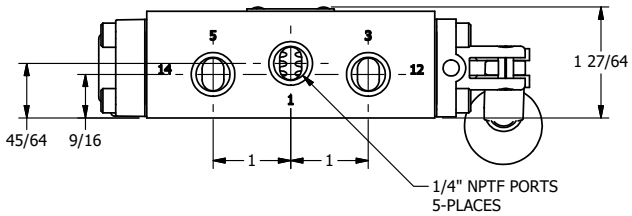


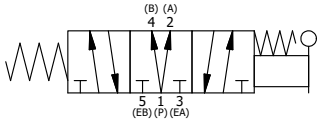


**AAA PRODUCTS INTERNATIONAL**
7114 Harry Hines Blvd
Dallas, TX 75235

TITLE: 1/4" SIDE PORT, LEVER, 3 POS, SPR REGEN CTR, BNT LVR RT, RED KNOB, 90D LVR

DRAWING NO.: DIM_HY2DBRJR

THE INFORMATION CONTAINED WITHIN THIS DOCUMENT IS PROPRIETARY TO AAA PRODUCTS AND MAY NOT BE DISCLOSED WITHOUT PRIOR WRITTEN CONSENT