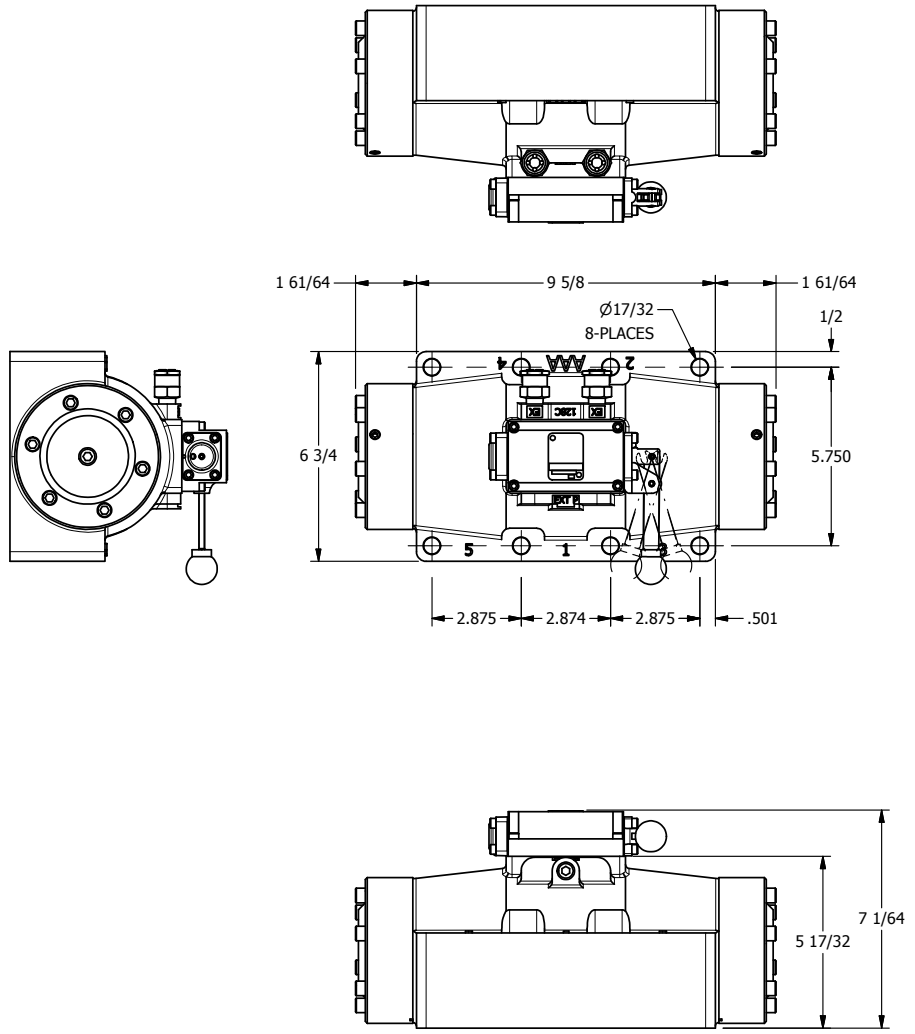

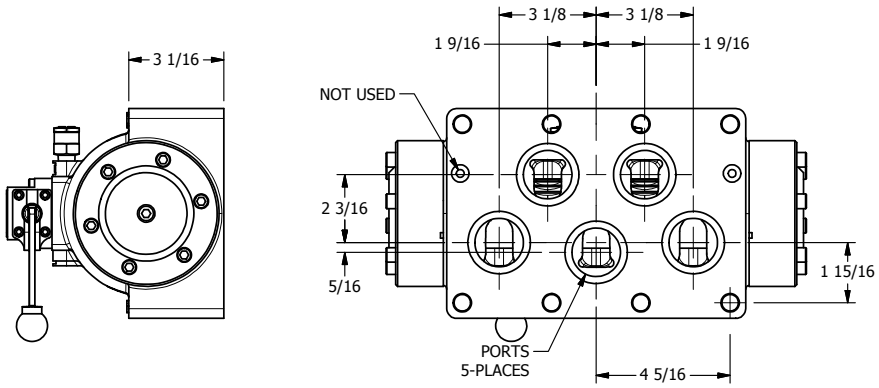

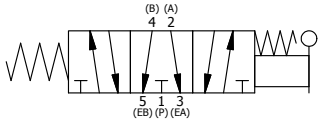

AAA PRODUCTS INTERNATIONAL 7114 Harry Hines Blvd Dallas, TX 75235	TITLE: 2" SUBPLATE, LEVER, 3 POS, SPR CTR, LEVER SHFT, FLOAT CTR SPL, 270D LEVER	DRAWING NO.: DIM_HY16PGRT

THE INFORMATION CONTAINED WITHIN THIS DOCUMENT IS PROPRIETARY TO AAA PRODUCTS AND MAY NOT BE DISCLOSED WITHOUT PRIOR WRITTEN CONSENT