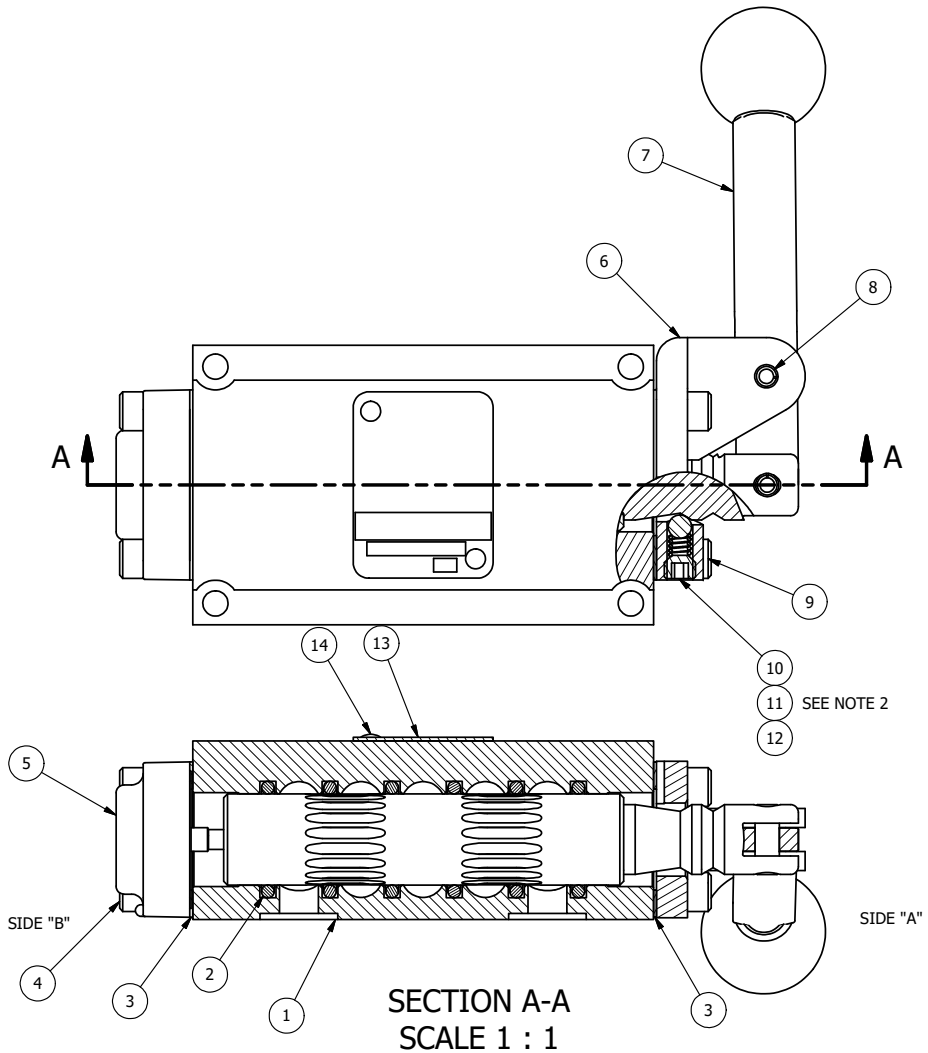

SECTION A-A
SCALE 1 : 1
VIEW FROM 3 PORT SIDE

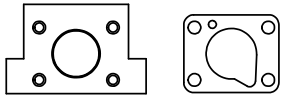

POSITION GASKET ON END OF VALVE SO
MOUNTING HOLES ALIGN
BOTH ENDS (SIDE 'A' SHOWN)

NOTES:
1) ALWAYS GIVE VALVE MODEL, AND PART NUMBER WHEN ORDERING PARTS.
2) LUBRICATE DETENT BALL, SPRING AND CLEVIS.

FLG	QTY	PART NO	DESCRIPTION
15	1	SPK-3	KIT - SUBPLATE MOUNTING, 3/8" SUBPLATE VALVES
14	2	V-212	SCREW, #2 X 3/16 DRIVE, TYPE U, OVAL HEAD, STAINLESS STEEL
13	1	AN-114	NAMEPLATE, BLANK, FOR VALVES WITH SPRINGS OR DETENTS
12	1	V-14	BALL, CHROME STEEL 3/16 DIA, GRADE 25, FOR DETENT
11	1	DS3	SPRING - DETENT, 1/4" & 3/8" VALVE
10	1	V-21	SCREW, 1/4-20 X 3/16, SOCKET SET, CUP POINT
9	4	V-162	SCREW, 10-24 X 5/8, SOCKET HEAD CAP
8	1	V-542	PIN, ROLL 3/16 X 1/2 ZINC PLATED STEEL FOR HE3-4 END CAP
7	1	HL3-521B20	HAND LEVER WITH RED KNOB, BENT 20 DEG SIDEWAYS, 1/4" & 3/8" VALVES
6	1	HE3-4D	ENDCAP - HAND, DETENT, 303 STAINLESS, 1/4" & 3/8" STACK VALVE
5	1	AY-HX3G	ASSY - DETENT A, SPR CTR FROM C, FLOAT CTR SPL, LEVER OR TREADLE, 1/4" & 3/8" VALVES
4	4	V-38	SCREW, 10-24 X 3/4, SOCKET HEAD CAP
3	2	ECG3	GASKET - END CAP, 1/4" & 3/8" VALVE
2	6	V-39	O-RING, VITON, STD BODY, 1/4" & 3/8" VALVES
1	1	BP3-2E	BODY - SOLID, PLAIN, NO PILOTS, ANODIZED, 3/8" SUBPLATE VALVE

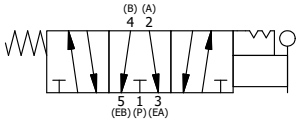

LIMITS ON DIMENSIONS UNLESS OTHERWISE SPECIFIED	2-PL DECIMAL ± .01 3-PL DECIMAL ± .005 FRACTIONAL ± 1/64 ANGULAR ± 1/2'	AAA PRODUCTS INTERNATIONAL	**AAA PRODUCTS INTERNATIONAL** **7114 Harry Hines Blvd** **Dallas, TX 75235**
DRAWN: RMcKenna	DATE: 2/9/2025	CHECKED: KWaite	DATE: 2/9/2025
SCALE: 1 : 1	SHEET: 1 OF 1	RELEASED: HWomack	DATE: 2/9/2025

TITLE:
3/8" SUBPLATE, LEVER, 3 POS,
DTNT A, FLOAT SPR CTR FRM C,
BNT LVR RT, RED KNB, 90D LVR

PART NO.: HX3PGBRJR

REV.:

THE INFORMATION CONTAINED WITHIN THIS DOCUMENT IS PROPRIETARY TO AAA PRODUCTS AND MAY NOT BE DISCLOSED WITHOUT PRIOR WRITTEN CONSENT

D:\Engineering\Product\Valves\Assembly\Level1\HX\SolidG\HX3PGBRJR.idw