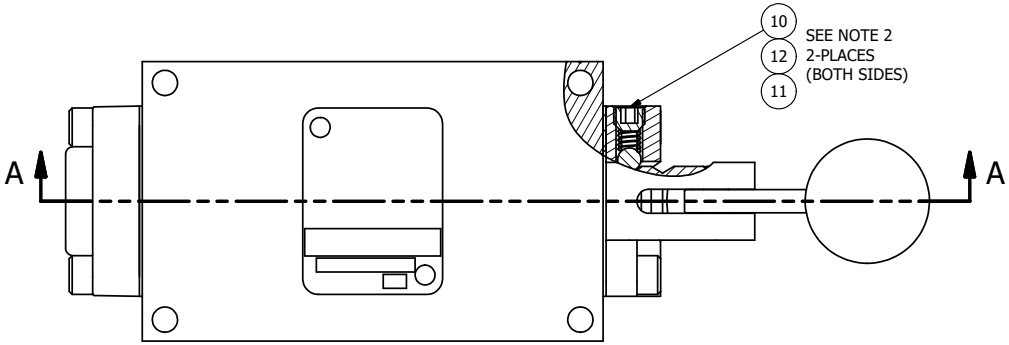

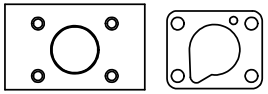

POSITION GASKET ON END OF VALVE SO
MOUNTING HOLES ALIGN
BOTH ENDS (SIDE 'A' SHOWN)

NOTES:
1) ALWAYS GIVE VALVE MODEL, AND PART NUMBER WHEN ORDERING PARTS.
2) LUBRICATE DETENT BALL, SPRING AND CLEVIS.

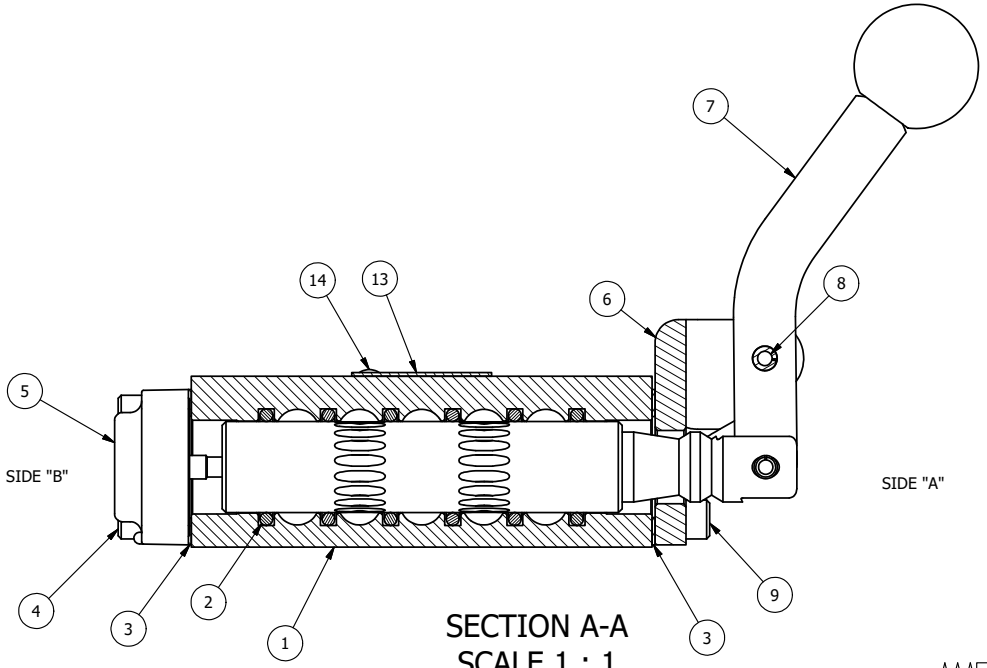

SECTION A-A
SCALE 1 : 1
VIEW FROM 3 PORT SIDE

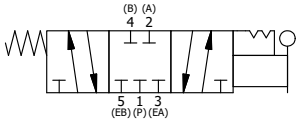

FLG	QTY	PART NO	DESCRIPTION
14	2	V-212	SCREW, #2 X 3/16 DRIVE, TYPE U, OVAL HEAD, STAINLESS STEEL
13	1	AN-114	NAMEPLATE, BLANK, FOR VALVES WITH SPRINGS OR DETENTS
12	2	V-14	BALL, CHROME STEEL 3/16 DIA, GRADE 25, FOR DETENT
11	2	DS3	SPRING - DETENT, 1/4" & 3/8" VALVE
10	2	V-21	SCREW, 1/4-20 X 3/16, SOCKET SET, CUP POINT
9	4	V-162	SCREW, 10-24 X 5/8, SOCKET HEAD CAP
8	1	V-508	PIN, ROLL 3/16 X 5/8 ZINC PLATED STEEL FOR 1/4 FOOT ENDCAP
7	1	HL3-521C	CURVED HAND LEVER WITH RED KNOB, 1/4" & 3/8" VALVE
6	1	HE3-5DD	END CAP, LEVER, DOUBLE DETENT, 303 STAINLESS STEEL, 1/4" & 3/8" VALVE
5	1	AY-HX3	ASSY - DETENT A, SPR CTR FROM C, CLSD CTR SPL, LEVER OR TREADLE, 1/4" & 3/8" VALVES
4	4	V-38	SCREW, 10-24 X 3/4, SOCKET HEAD CAP
3	2	ECG3	GASKET - END CAP, 1/4" & 3/8" VALVE
2	6	V-39	O-RING, VITON, STD BODY, 1/4" & 3/8" VALVES
1	1	B2-2E	BODY - SOLID, PLAIN, NO PILOTS, ANODIZED, 1/4" SIDE PORT VALVE

LIMITS ON DIMENSIONS UNLESS OTHERWISE SPECIFIED
2-PL DECIMAL ± .01
3-PL DECIMAL ± .005
FRACTIONAL ± 1/64
ANGULAR ± 1/2'

AAA PRODUCTS INTERNATIONAL
7114 Harry Hines Blvd
Dallas, TX 75235

DRAWN: RMcKenna	DATE: 2/8/2025	CHECKED: KWaite	DATE: 2/8/2025
SCALE: 1 : 1	SHEET: 1 OF 1	RELEASED: HWomack	DATE: 2/8/2025

TITLE: 1/4" SIDE PORT, LEVER, 3 POS, DTNT A, CLSD SPR CTR FRM C, CRVD LVR, HVY DTY, RED KNB

PART NO.: HX2CHJ

REV.:

THE INFORMATION CONTAINED WITHIN THIS DOCUMENT IS PROPRIETARY TO AAA PRODUCTS AND MAY NOT BE DISCLOSED WITHOUT PRIOR WRITTEN CONSENT

D:\Engineering\Product\Valves\Assembly\Level1\HX\SolidG\HX2ch3.dwg