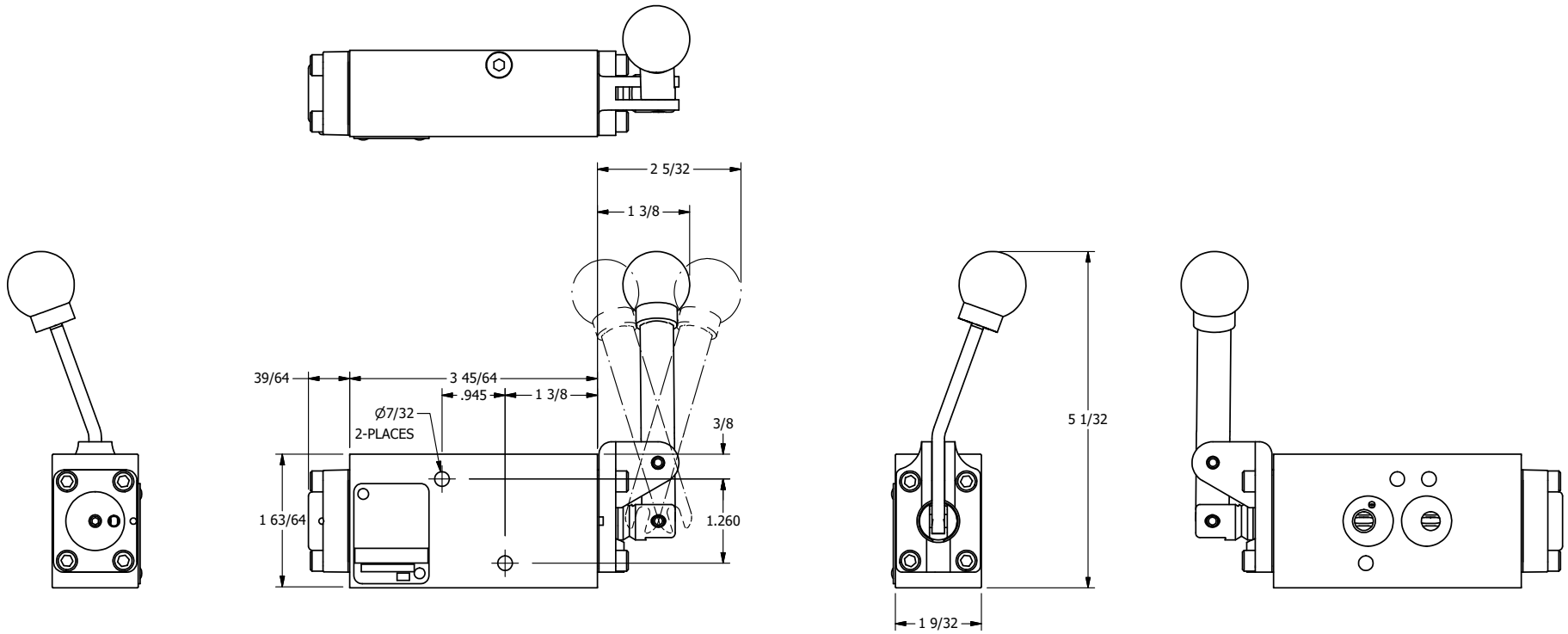

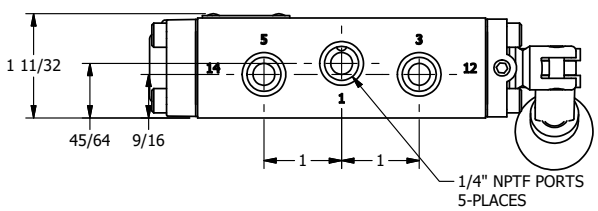

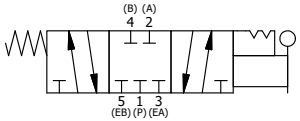

AAA PRODUCTS INTERNATIONAL
7114 Harry Hines Blvd
Dallas, TX 75235

TITLE: 1/4" NAMUR, LEVER, 3 POS, DTNT A, CLSD SPR CTR FRM C, BNT LVR RT, 90D LVR

DRAWING NO.: DIM_NHX2BRR

THE INFORMATION CONTAINED WITHIN THIS DOCUMENT IS PROPRIETARY TO AAA PRODUCTS AND MAY NOT BE DISCLOSED WITHOUT PRIOR WRITTEN CONSENT