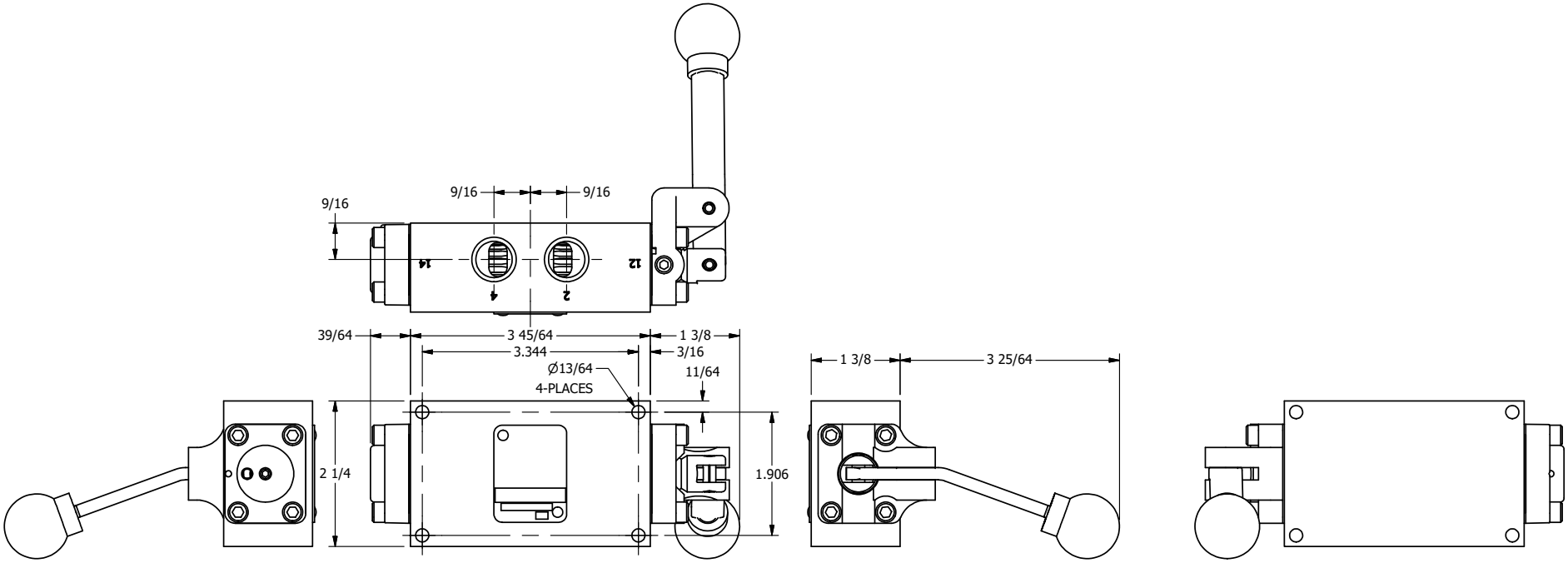

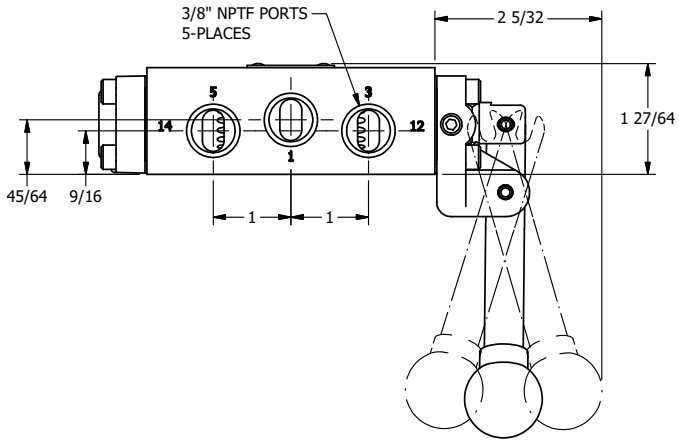

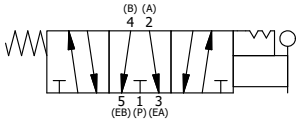

AAA PRODUCTS INTERNATIONAL 7114 Harry Hines Blvd Dallas, TX 75235	TITLE: 3/8" SIDE PORT, LEVER, 3 POS, DTNT A, FLOAT SPR CTR FRM C, BNT LVR RT, 180D LVR	DRAWING NO.: DIM_HX3GBRT

THE INFORMATION CONTAINED WITHIN THIS DOCUMENT IS PROPRIETARY TO AAA PRODUCTS AND MAY NOT BE DISCLOSED WITHOUT PRIOR WRITTEN CONSENT