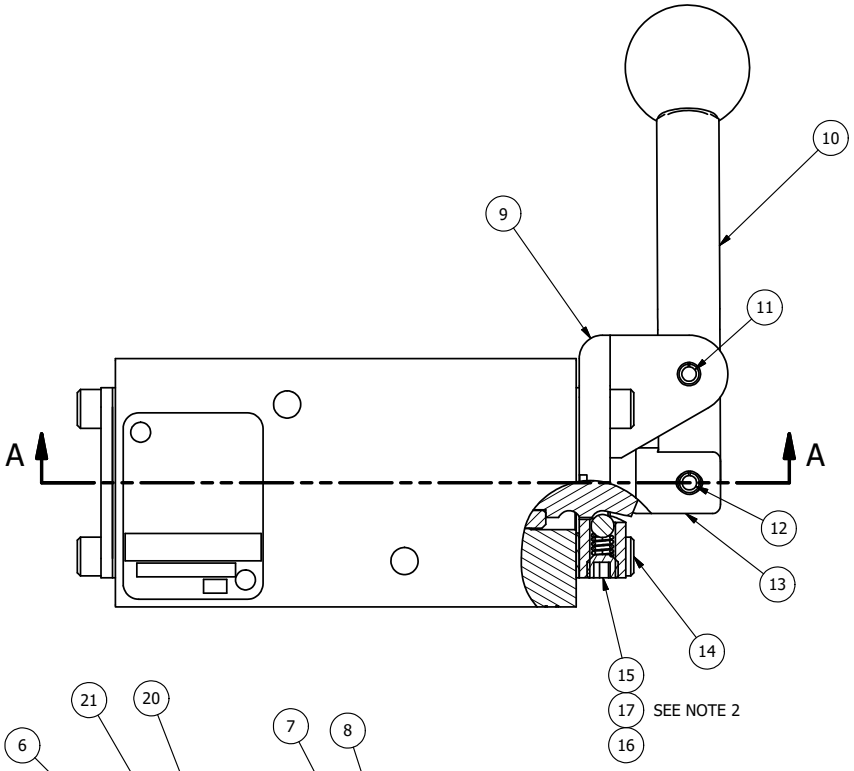

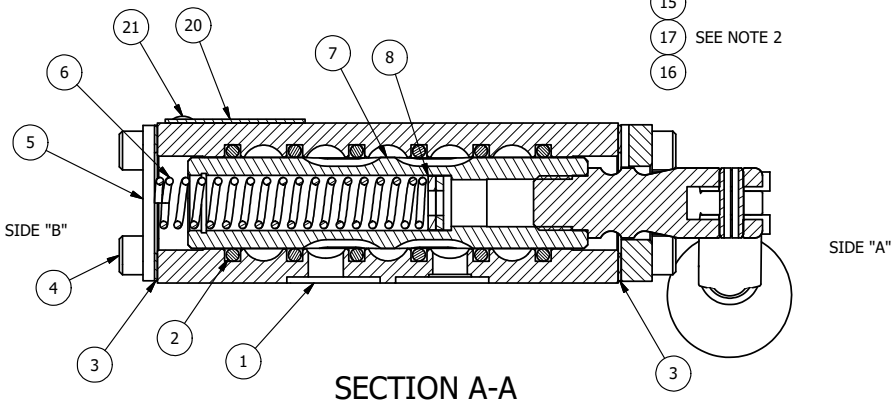

SECTION A-A
SCALE 1 : 1
VIEW FROM 3 PORT SIDE

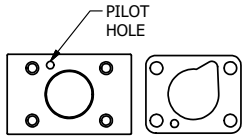

POSITION GASKET TO SEAL PILOT HOLE
BOTH SIDES. (SIDE 'A' SHOWN)

NOTES:
1) ALWAYS GIVE VALVE MODEL, AND PART NUMBER WHEN ORDERING PARTS.
2) LUBRICATE DETENT BALL, SPRING AND CLEVIS.

FLG	QTY	PART NO	DESCRIPTION
22	1	NSPK-2	KIT - SUBPLATE MOUNTING, NAMUR VALVES
21	2	V-212	SCREW, #2 X 3/16 DRIVE, TYPE U, OVAL HEAD, STAINLESS STEEL
20	1	AN-114	NAMEPLATE, BLANK, FOR VALVES WITH SPRINGS OR DETENTS
19	1	V-548	O-RING, BUNA-N, 70 DURO, 6MM X 1MM, NAMUR PLUG
18	1	V-547	PLUG, 360 HALF HARD BRASS, NAMUR VALVE
17	1	V-14	BALL, CHROME STEEL 3/16 DIA, GRADE 25, FOR DETENT
16	1	DS3	SPRING - DETENT, 1/4" & 3/8" VALVE
15	1	V-21	SCREW, 1/4-20 X 3/16, SOCKET SET, CUP POINT
14	4	V-162	SCREW, 10-24 X 5/8, SOCKET HEAD CAP
13	1	HC3-189	CLEVIS - HAND, STAINLESS, 189VY ACTION, 1/4" & 3/8" VALVE
12	1	V-48	PIN, ROLL 3/16 X 9/16, STEEL, ZINC PLATED
11	1	V-542	PIN, ROLL 3/16 X 1/2 ZINC PLATED STEEL FOR HE3-4 END CAP
10	1	HL3-521B20	HAND LEVER WITH RED KNOB, BENT 20 DEG SIDEWAYS, 1/4" & 3/8" VALVES
9	1	HE3-4D	ENDCAP - HAND, DETENT, 303 STAINLESS, 1/4" & 3/8" STACK VALVE
8	3	V-43	WASHER - SPRING CTR, 302/304 STAINLESS STEEL, 1/4" & 3/8" VALVES
7	1	SSH3D	SPOOL - 'D', 3 POS, REGEN CTR, 1/4" & 3/8" VALVE
6	1	CS3-1	SPRING - CENTERING, 1/4" & 3/8" VALVES
5	1	SEC3	END CAP, 304 STAINLESS STEEL, 1/4" & 3/8" VALVE
4	4	V-37	SCREW, 10-24 X 1/2, SOCKET HEAD CAP
3	2	ECG3	GASKET - END CAP, 1/4" & 3/8" VALVE
2	6	V-39	O-RING, VITON, STD BODY, 1/4" & 3/8" VALVES
1	1	B2-11E-W	NAMUR INTERFACE, WITH 3/2 CONVERSION, 1/4" VALVE

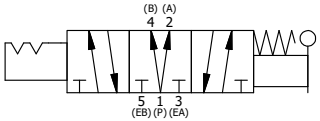

LIMITS ON DIMENSIONS UNLESS OTHERWISE SPECIFIED
2-PL DECIMAL ± .01
3-PL DECIMAL ± .005
FRACTIONAL ± 1/64
ANGULAR ± 1/2'

AAA PRODUCTS INTERNATIONAL
7114 Harry Hines Blvd
Dallas, TX 75235

DRAWN: RMcKenna	DATE: 2/2/2025	CHECKED: KWaite	DATE: 2/2/2025
SCALE: 1 : 1	SHEET: 1 OF 1	RELEASED: HWomack	DATE: 2/2/2025

TITLE:
1/4" NAMUR, LEVER, 3 POS,
DTNT C, REGEN SPR CTR FRM A,
BNT LVR RGHT, RED KNOB, 90D LVR

PART NO.: NHW2DBRJR

REV.:

D:\Engineering\Product\Valves\Assembly\Level\HWS\VGI\NHW2DBRJR.dw

THE INFORMATION CONTAINED WITHIN THIS DOCUMENT IS PROPRIETARY TO AAA PRODUCTS AND MAY NOT BE DISCLOSED WITHOUT PRIOR WRITTEN CONSENT