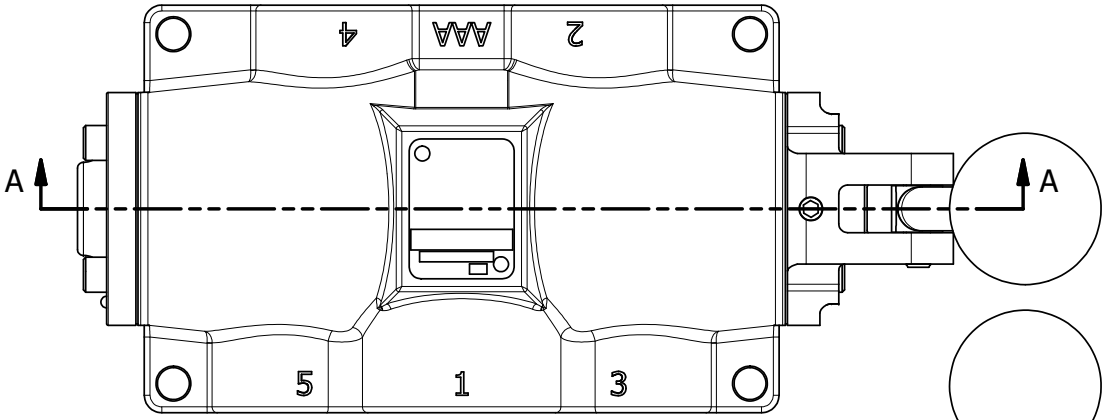

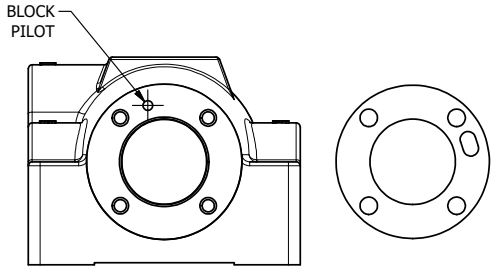

POSITION GASKET ON END OF VALVE SO
GASKET COVERES PILOT HOLE
BOTH SIDES (SIDE 'A' SHOWN)

NOTES:
1) ALWAYS GIVE VALVE MODEL AND PART NUMBER WHEN ORDERING PARTS.
2) LUBRICATE SPRINGS, AND DETENT BALL.

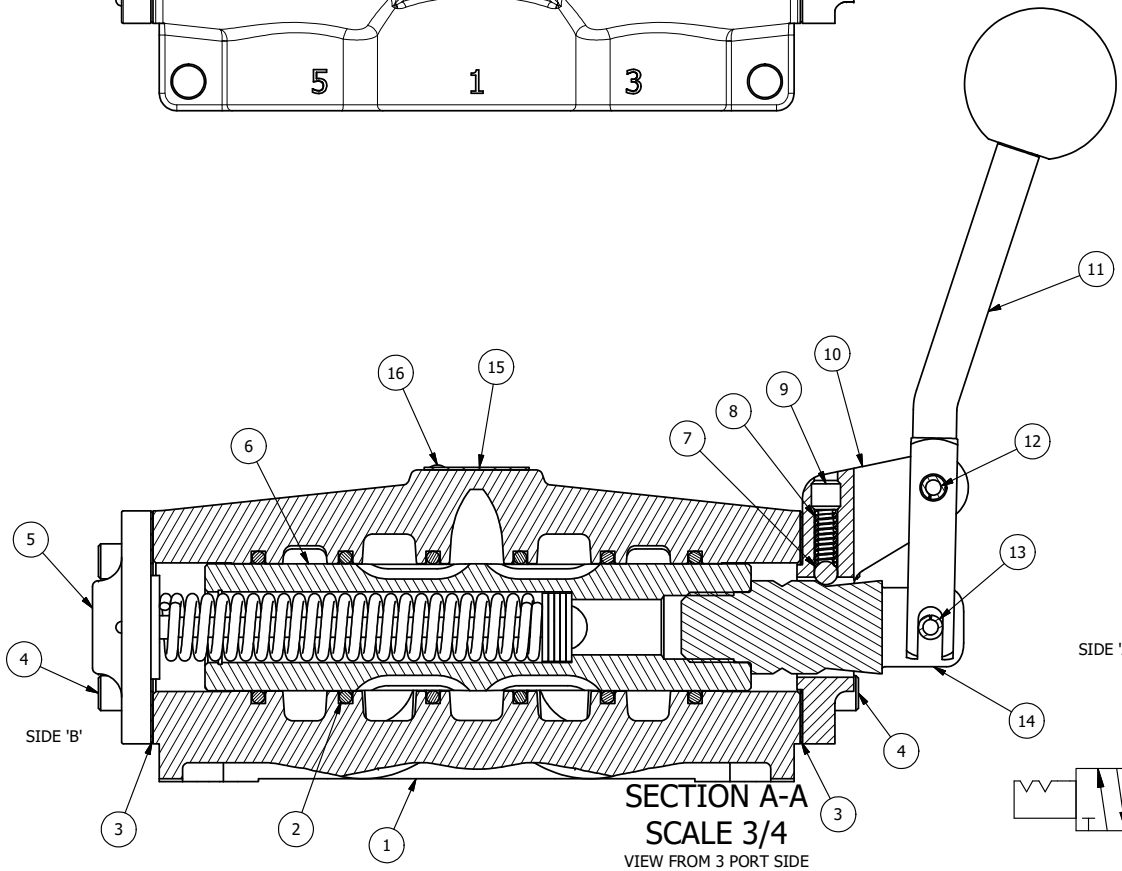

SECTION A-A
SCALE 3/4
VIEW FROM 3 PORT SIDE

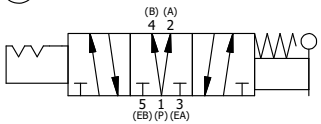

FLG	QTY	PART NO	DESCRIPTION
16	2	V-212	SCREW, #2 X 3/16 DRIVE, TYPE U, OVAL HEAD, STAINLESS STEEL
15	1	AN-114	NAMEPLATE, BLANK, FOR VALVES WITH SPRINGS OR DETENTS
14	1	SC8-332VY	CLEVIS - 332VY, 189VY ACTION, 3/4" & 1" VALVE
13	1	V-51-SS	PIN, ROLL 1/4 X 1 FOR 3/4 & 1" HAND FOOT & CAM VALVES, STAINLESS STEEL
12	1	V-70	PIN, ROLL 1/4 X 1 1/8 FOR 3/4 & 1" HAND AND FOOT VALVES
11	1	HL8-9C	CURVED HAND LEVER WITH KNOB, 3/4" & 1" VALVE
10	1	FE8-3	END CAP, HAND & FOOT, DETENT, STEEL, NICKEL PLT, 3/4" & 1" VALVES
9	1	V-8	SCREW, 5/16-18 X 5/16, SOCKET SET, CUP POINT
8	1	DS48	SPRING - DETENT, 1/2", 3/4" & 1" VALVE
7	1	V-4	BALL, CHROME STEEL 1/4 DIA. FOR DETENT
6	1	SSH8D	SPOOL - STANDARD, 3 POS, CLSD CTR, 3/4" & 1" VALVE
5	1	AY-HW8	ASSY - SPR CTR FROM A, 189VY ACTION, 3/4" & 1" VALVE
4	8	V-46	SCREW, 1/4-20 X 3/4, SOCKET HEAD CAP
3	2	ECG48	GASKET - END CAP, 1/2", 3/4" & 1" VALVE
2	6	V-30	O-RING, BUNA-N, 70 DURO, AS-220, (REF 1-3/8 X 1-5/8 X 1/8), 3/4" & 1" VALVES
1	1	B8-1	BODY, 1" SIDE PORT, UPPER PILOTS, ANODIZED

LIMITS ON DIMENSIONS UNLESS OTHERWISE SPECIFIED
2-PL DECIMAL ± .01
3-PL DECIMAL ± .005
FRACTIONAL ± 1/64
ANGULAR ± 1/2'

AAA PRODUCTS INTERNATIONAL
7114 Harry Hines Blvd
Dallas, TX 75235

DRAWN: RMcKenna	DATE: 3/16/2025	CHECKED: KWaite	DATE: 3/16/2025
SCALE: 3/4	SHEET: 1 OF 1	RELEASED: HWomack	DATE: 3/16/2025

TITLE: 1" SIDE PORT, LEVER, 3 POS, DETENT C, SPR CTR FROM A, REGEN CTR SPL, CRVD LVR

PART NO.: HW8DC

REV.:

D:\Engineering\Product\Valves\Assembly\level1\HW8\VGt\HW8DC.idw

THE INFORMATION CONTAINED WITHIN THIS DOCUMENT IS PROPRIETARY TO AAA PRODUCTS AND MAY NOT BE DISCLOSED WITHOUT PRIOR WRITTEN CONSENT