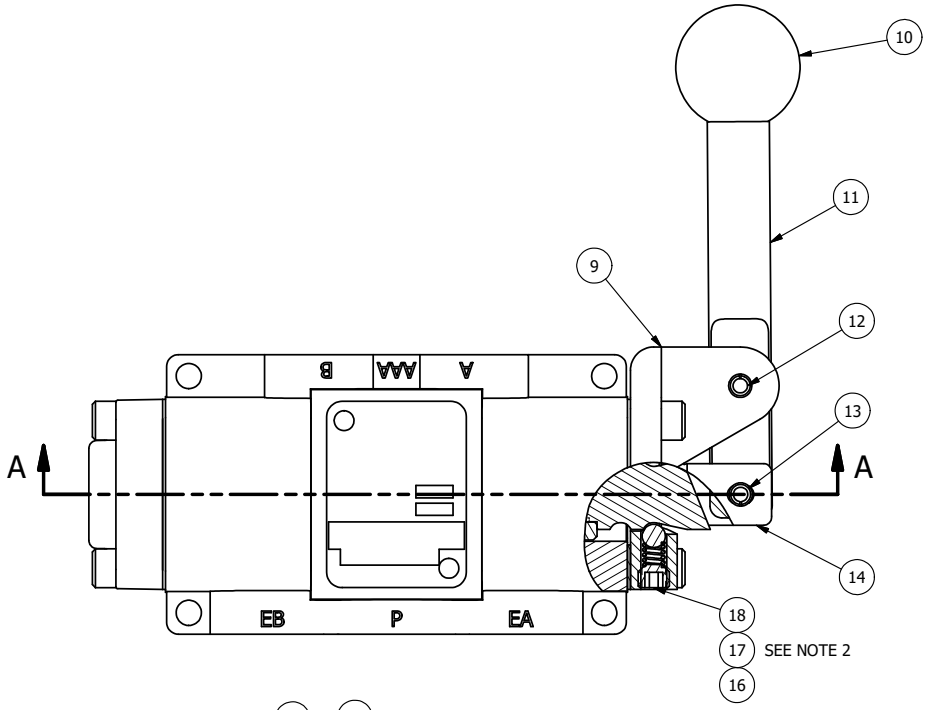

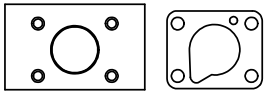

POSITION GASKET ON END OF VALVE SO
MOUNTING HOLES ALIGN
BOTH ENDS (SIDE 'A' SHOWN)

NOTES:
1) ALWAYS GIVE VALVE MODEL, AND PART NUMBER WHEN ORDERING PARTS.
2) LUBRICATE DETENT BALL, SPRING AND CLEVIS.
3) APPLY ANTI-SEIZE COMPOUND LIGHTLY TO THE FIRST 1/4" OF THE SCREW THREAD. APPLICATION SHOULD BE AROUND THE THREAD OF THE SCREW.

FLG	QTY	PART NO	DESCRIPTION
20	2	V-212	SCREW, #2 X 3/16 DRIVE, TYPE U, OVAL HEAD, STAINLESS STEEL
19	1	AN-106	NAMEPLATE, BLANK, STAINLESS STEEL
18	1	V-21-SS	SCREW, 1/4-20 X 3/16, SOCKET SET, CUP POINT, 18-8 SS
17	1	DS3-1	SPRING, DETENT, STAINLESS, 1/4" & 3/8" VALVE. LEE SPRING # LC 029B 0 S.
16	1	V-14-SS	BALL, 440C STAINLESS STEEL, 3/16 DIA. FOR DETENT
15	4	V-162-SS	SCREW, 10-24 X 5/8, SOCKET HEAD CAP, STAINLESS STEEL
14	1	HC3-189	CLEVIS - HAND, STAINLESS, 189VY ACTION, 1/4" & 3/8" VALVE
13	1	V-48-SS	PIN, ROLL 3/16 X 9/16 18-8 STAINLESS
12	1	V-542-SS	PIN, ROLL 3/16 X 1/2 NON-MAGNETIC STAINLESS STEEL FOR HE3-4 END CAP
11	1	HL3-SS	HAND LEVER, 303 STAINLESS STEEL, 1/4" & 3/8" VALVE
10	1	V-521	KNOB, RED (BRASS 3/8-16 INSERT), 1" DIA BALL, 1/4" & 3/8" VALVE
9	1	HE3-4D	ENDCAP - HAND, DETENT, 303 STAINLESS, 1/4" & 3/8" STACK VALVE
8	3	V-43	WASHER - SPRING CTR, 302/304 STAINLESS STEEL, 1/4" & 3/8" VALVES
7	1	SSH3-SS	SPOOL - STANDARD, 2 POS, CLSD CTR, STAINLESS, 1/4" & 3/8" VALVE
6	1	CS3-1	SPRING - CENTERING, 1/4" & 3/8" VALVES
5	1	SEC3-3	END CAP, VENTED, STAINLESS STEEL, 1/4" & 3/8" VALVES
4	4	V-38-SS	SCREW, 10-24 X 3/4, SOCKET HEAD CAP, 18-8 SS
3	2	ECG3	GASKET - END CAP, 1/4" & 3/8" VALVE
2	6	V-39	O-RING, VITON, STD BODY, 1/4" & 3/8" VALVES
1	1	B2-2-SS	BODY - STAINLESS STEEL, PLAIN, NO PILOTS, 1/4" SIDE PORT VALVE

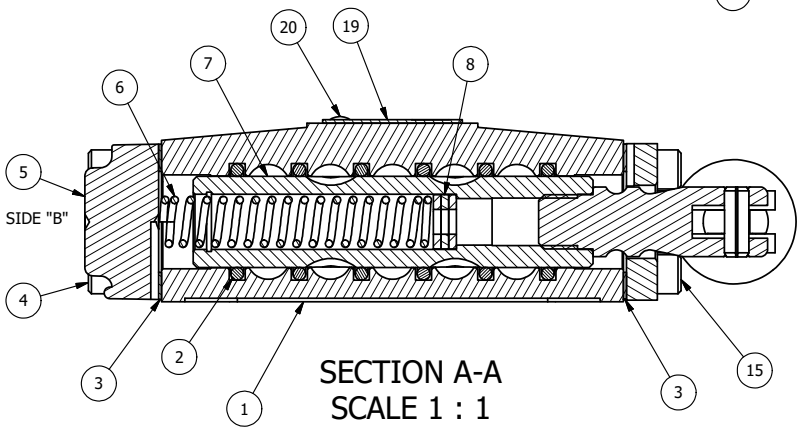

SECTION A-A
SCALE 1 : 1
VIEW FROM 3 PORT SIDE

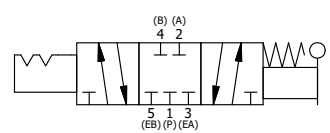

LIMITS ON DIMENSIONS UNLESS OTHERWISE SPECIFIED	2-PL DECIMAL ± .01 3-PL DECIMAL ± .005 FRACTIONAL ± 1/64 ANGULAR ± 1/2°	AAA PRODUCTS INTERNATIONAL 7114 Harry Hines Blvd Dallas, TX 75235	
DRAWN: RMcKenna	DATE: 1/28/2025	CHECKED: KWaite	DATE: 1/28/2025
SCALE: 1 : 1	SHEET: 1 OF 1	RELEASED: HWomack	DATE: 1/28/2025
TITLE: 1/4" SIDE PORT, LEVER, 3 POS, SPR CLSD CTR FRM A, DTNT C, RED KNOB, 90D LVR, STAINLESS		PART NO.: HW2JRSS	REV.:

THE INFORMATION CONTAINED WITHIN THIS DOCUMENT IS PROPRIETARY TO AAA PRODUCTS AND MAY NOT BE DISCLOSED WITHOUT PRIOR WRITTEN CONSENT

D:\Engineering\Product\valves\Assembly\lever\HW2JWG\HW2JRSS.idw