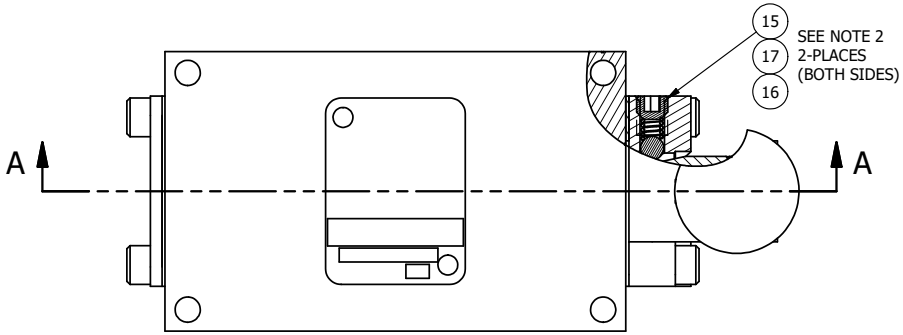

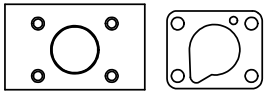

POSITION GASKET ON END OF VALVE SO
MOUNTING HOLES ALIGN
BOTH ENDS (SIDE 'A' SHOWN)

NOTES:
1) ALWAYS GIVE VALVE MODEL, AND PART NUMBER WHEN ORDERING PARTS.
2) LUBRICATE DETENT BALL, SPRING AND CLEVIS.

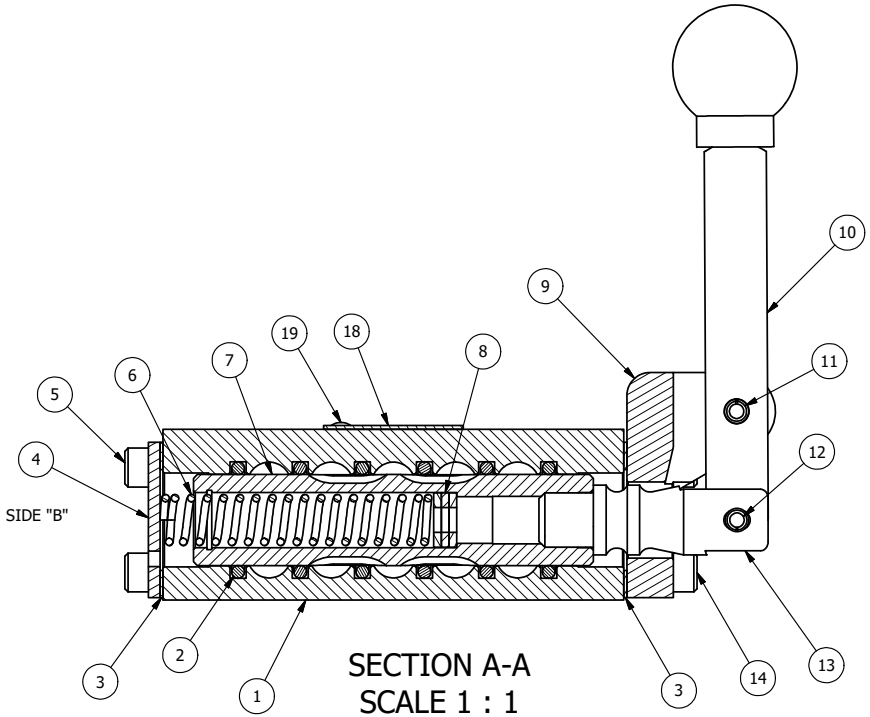

SECTION A-A
SCALE 1 : 1
VIEW FROM 3 PORT SIDE

FLG	QTY	PART NO	DESCRIPTION
19	2	V-212	SCREW, #2 X 3/16 DRIVE, TYPE U, OVAL HEAD, STAINLESS STEEL
18	1	AN-114	NAMEPLATE, BLANK, FOR VALVES WITH SPRINGS OR DETENTS
17	2	V-14	BALL, CHROME STEEL 3/16 DIA, GRADE 25, FOR DETENT
16	2	DS3	SPRING - DETENT, 1/4" & 3/8" VALVE
15	2	V-21	SCREW, 1/4-20 X 3/16, SOCKET SET, CUP POINT
14	4	V-38	SCREW, 10-24 X 3/4, SOCKET HEAD CAP
13	1	HC3-189	CLEVIS - HAND, 189VY ACTION, 1/4" & 3/8" VALVE
12	1	V-48	PIN, ROLL 3/16 X 9/16, STEEL, ZINC PLATED
11	1	V-7	PIN, ROLL 3/16 X 11/16, STEEL, FOR 1/4 THRU 1/2" HAND,FT & CAM V
10	1	HL3-24	HAND LEVER WITH KNOB, 1/4" & 3/8" VALVE
9	1	HE3-3DD	END CAP, LEVER, DOUBLE DETENT, 380 AL, 1/4" & 3/8" VALVE
8	3	V-43	WASHER - SPRING CTR, 302/304 STAINLESS STEEL, 1/4" & 3/8" VALVES
7	1	SSH3D	SPOOL - 'D', 3 POS, REGEN CTR, 1/4" & 3/8" VALVE
6	1	CS3-1	SPRING - CENTERING, 1/4" & 3/8" VALVES
5	4	V-37	SCREW, 10-24 X 1/2, SOCKET HEAD CAP
4	1	SEC3	END CAP, 304 STAINLESS STEEL, 1/4" & 3/8" VALVE
3	2	ECG3	GASKET - END CAP, 1/4" & 3/8" VALVE
2	6	V-39	O-RING, VITON, STD BODY, 1/4" & 3/8" VALVES
1	1	B2-2E	BODY - SOLID, PLAIN, NO PILOTS, ANODIZED, 1/4" SIDE PORT VALVE

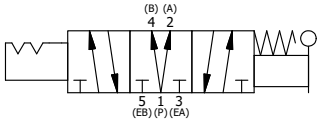

LIMITS ON DIMENSIONS UNLESS OTHERWISE SPECIFIED	2-PL DECIMAL ± .01 3-PL DECIMAL ± .005 FRACTIONAL ± 1/64 ANGULAR ± 1/2'	AAA PRODUCTS INTERNATIONAL 7114 Harry Hines Blvd Dallas, TX 75235
DRAWN: RMcKenna	DATE: 11/1/2015	CHECKED: KWaite DATE: 11/1/2015
SCALE: 1 : 1	SHEET: 1 OF 1	RELEASED: HWomack DATE: 11/1/2015
TITLE: 1/4" SIDE PORT, LEVER, 3 POS, DETENT C, SPR CTR FROM A, REGEN CTR SPL		PART NO.: HW2D REV.:

THE INFORMATION CONTAINED WITHIN THIS DOCUMENT IS PROPRIETARY TO AAA PRODUCTS AND MAY NOT BE DISCLOSED WITHOUT PRIOR WRITTEN CONSENT

D:\Engineering\Product\Valve\Assembly\Lever\HW\Solid\HW2D.idw