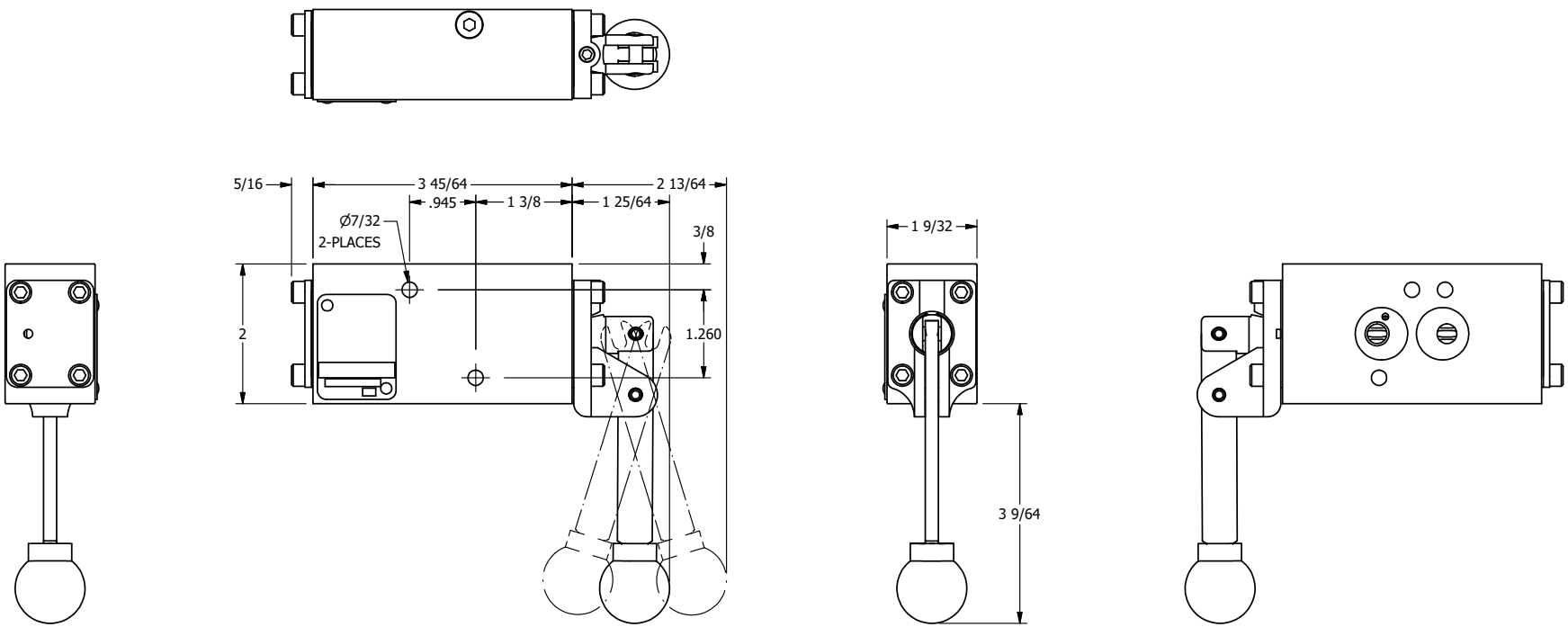

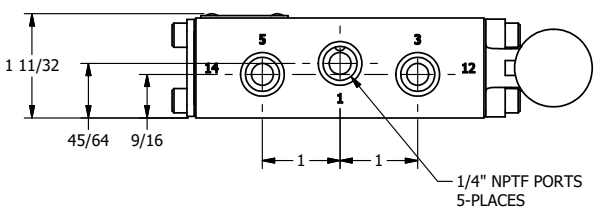

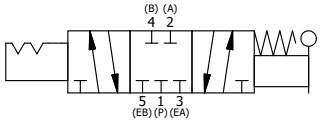

AAA PRODUCTS INTERNATIONAL
7114 Harry Hines Blvd
Dallas, TX 75235

TITLE: 1/4" NAMUR, LEVER, 3 POS, DETENT C, SPR CTR FROM A, CLSD CTR SPL, 270D LVR

DRAWING NO.: DIM_NHW2RT

THE INFORMATION CONTAINED WITHIN THIS DOCUMENT IS PROPRIETARY TO AAA PRODUCTS AND MAY NOT BE DISCLOSED WITHOUT PRIOR WRITTEN CONSENT