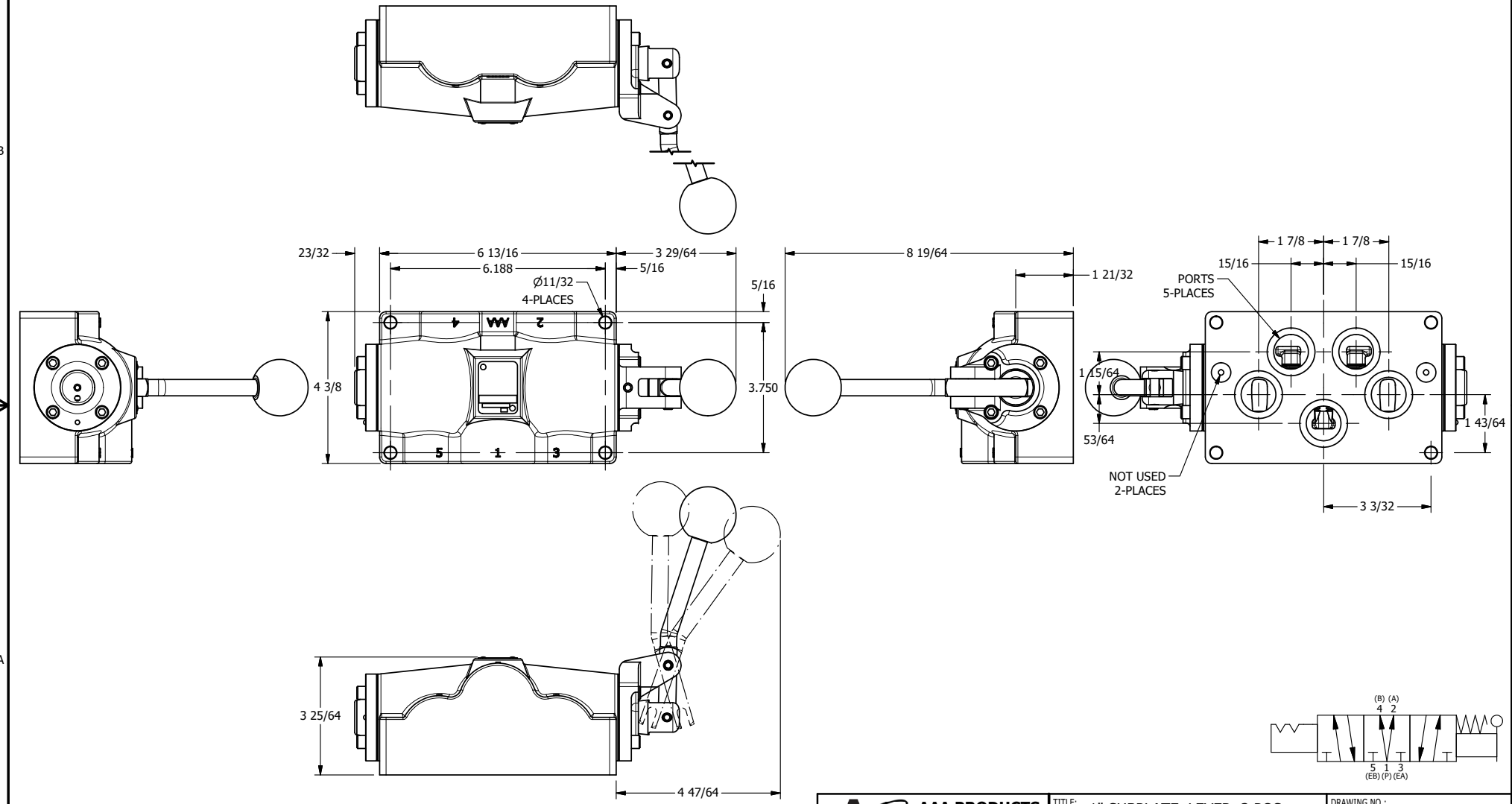

AAA PRODUCTS INTERNATIONAL
7114 Harry Hines Blvd
Dallas, TX 75235

TITLE: 1" SUBPLATE, LEVER, 3 POS, DETENT C, SPR CTR FROM A, REGEN CTR SPL, CRVD LVR

DRAWING NO.: DIM_HW8PDC

THE INFORMATION CONTAINED WITHIN THIS DOCUMENT IS PROPRIETARY TO AAA PRODUCTS AND MAY NOT BE DISCLOSED WITHOUT PRIOR WRITTEN CONSENT