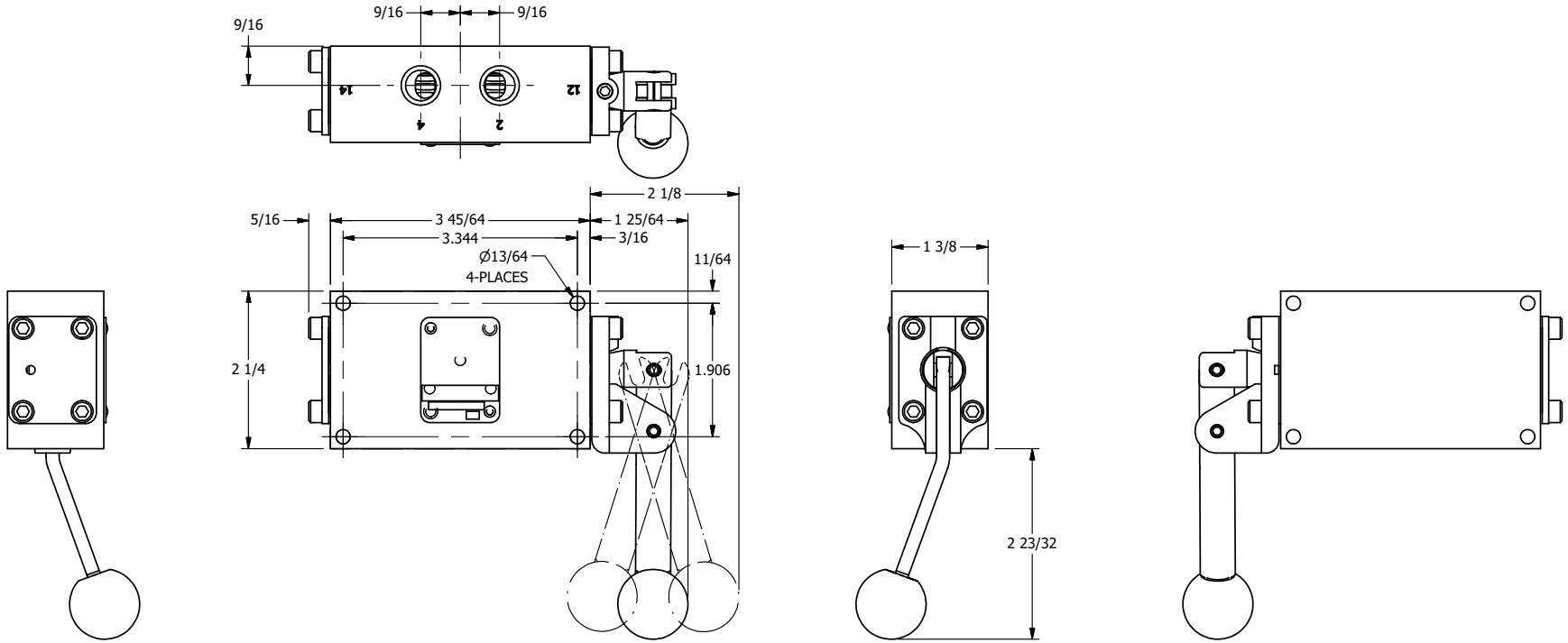

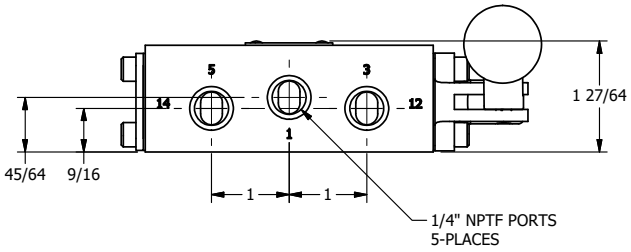

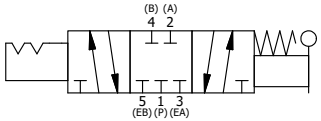

AAA PRODUCTS INTERNATIONAL
7114 Harry Hines Blvd
Dallas, TX 75235

TITLE: 1/4" SIDE PORT, LEVER, 3 POS, DTNT C, CLSD SPR CTR FRM A, BNT LVR RGHT, RED KNOB, 270D LVR

DRAWING NO.: DIM_HW2BRJRT

THE INFORMATION CONTAINED WITHIN THIS DOCUMENT IS PROPRIETARY TO AAA PRODUCTS AND MAY NOT BE DISCLOSED WITHOUT PRIOR WRITTEN CONSENT