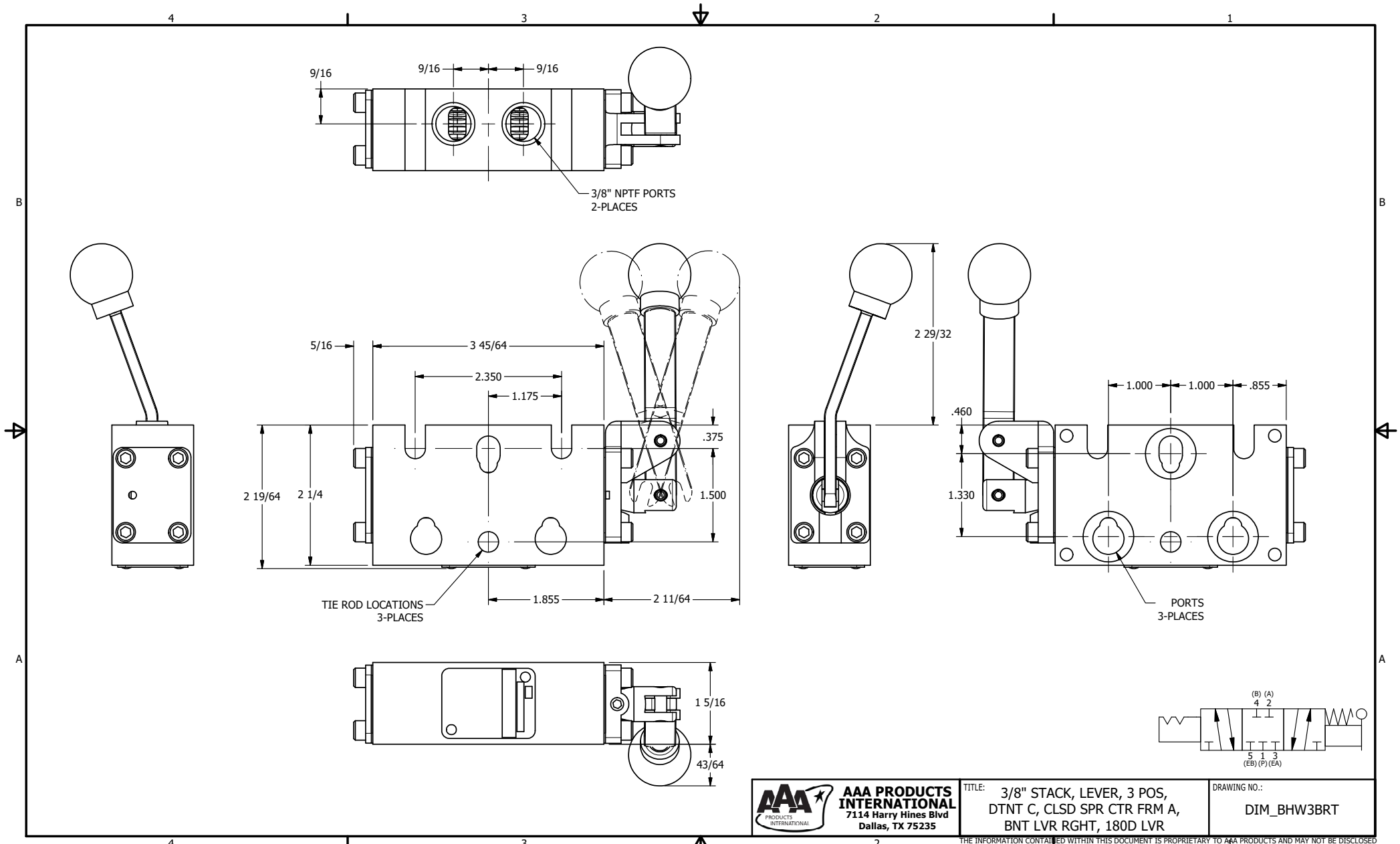

AAA PRODUCTS INTERNATIONAL
7114 Harry Hines Blvd
Dallas, TX 75235

TITLE: 3/8" STACK, LEVER, 3 POS, DTNT C, CLSD SPR CTR FRM A, BNT LVR RGHT, 180D LVR

DRAWING NO.: DIM_BHW3BRT

THE INFORMATION CONTAINED WITHIN THIS DOCUMENT IS PROPRIETARY TO AAA PRODUCTS AND MAY NOT BE DISCLOSED WITHOUT PRIOR WRITTEN CONSENT