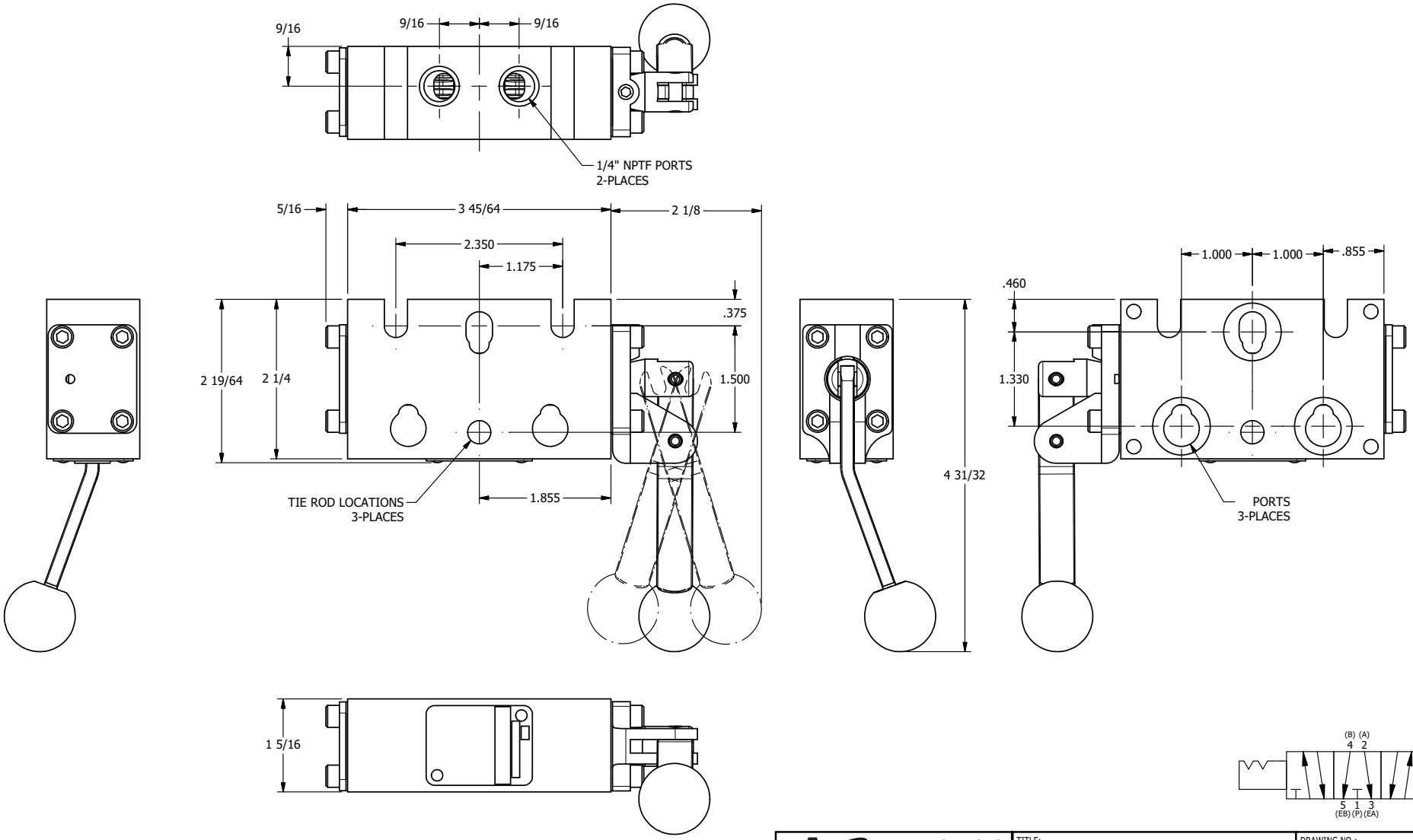

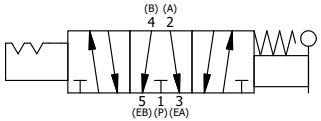

AAA PRODUCTS INTERNATIONAL
7114 Harry Hines Blvd
Dallas, TX 75235

TITLE: 1/4" STACK, LEVER, 3 POS, DTNT C, REGEN SPR CTR FRM A, BNT LVR LFT, RED KNOB

DRAWING NO.: DIM_BHW2GBLJ

THE INFORMATION CONTAINED WITHIN THIS DOCUMENT IS PROPRIETARY TO AAA PRODUCTS AND MAY NOT BE DISCLOSED WITHOUT PRIOR WRITTEN CONSENT