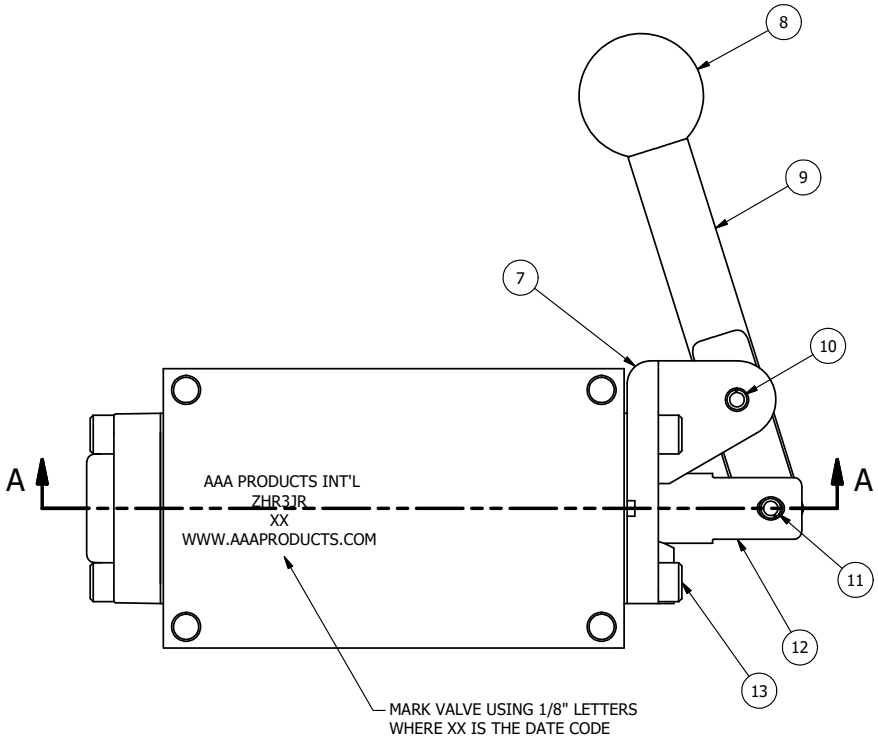

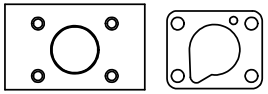

POSITION GASKET ON END OF VALVE SO
MOUNTING HOLES ALIGN
BOTH ENDS (SIDE 'A' SHOWN)

NOTES:
1) ALWAYS GIVE VALVE MODEL, AND PART NUMBER WHEN ORDERING PARTS.

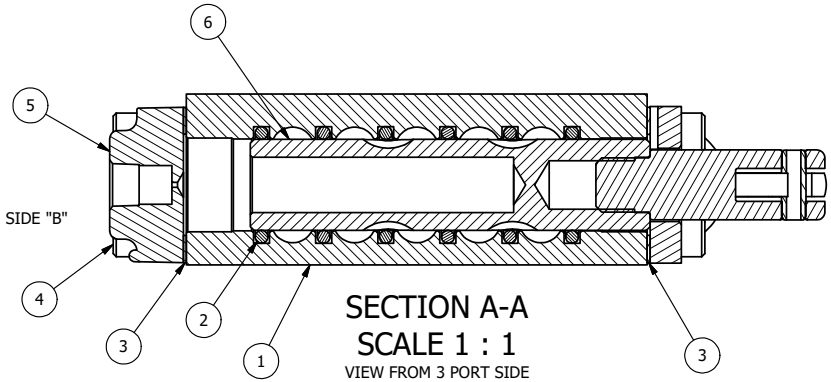

SECTION A-A
SCALE 1 : 1
VIEW FROM 3 PORT SIDE

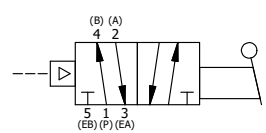

FLG	QTY	PART NO	DESCRIPTION
13	4	V-162-SS	SCREW, 10-24 X 5/8, SOCKET HEAD CAP, STAINLESS STEEL
12	1	HC3	CLEVIS - NO DETENTS, STAINLESS, 1/4" & 3/8" VALVE
11	1	V-48-SS	PIN, ROLL 3/16 X 9/16 18-8 STAINLESS
10	1	V-542-SS	PIN, ROLL 3/16 X 1/2 NON-MAGNETIC STAINLESS STEEL FOR HE3-4 END CAP
9	1	HL3-SS	HAND LEVER, 303 STAINLESS STEEL, 1/4" & 3/8" VALVE
8	1	V-521	KNOB, RED (BRASS 3/8-16 INSERT), 1" DIA BALL, 1/4" & 3/8" VALVE
7	1	HE3-4	ENDCAP - HAND OPERATOR, 303 STAINLESS, 1/4" & 3/8" STACK VALVE
6	1	S3	SPOOL - STANDARD, 2 POS, CLSD CTR, 1/4" & 3/8" VALVE
5	1	PEC3-11	END CAP, PILOT, STAINLESS STEEL, 1/4" & 3/8" VALVE
4	4	V-38-SS	SCREW, 10-24 X 3/4, SOCKET HEAD CAP, 18-8 SS
3	2	ECG3	GASKET - END CAP, 1/4" & 3/8" VALVE
2	6	V-39	O-RING, VITON, STD BODY, 1/4" & 3/8" VALVES
1	1	ZB3-2	BODY - BRASS, NO PILOTS, 3/8" SIDE PORT VALVE

LIMITS ON DIMENSIONS UNLESS OTHERWISE SPECIFIED
2-PL DECIMAL ± .01
3-PL DECIMAL ± .005
FRACTIONAL ± 1/64
ANGULAR ± 1/2°

AAA PRODUCTS INTERNATIONAL
7114 Harry Hines Blvd
Dallas, TX 75235

DRAWN: RMcKenna	DATE: 2/12/2025	CHECKED: KWaite	DATE: 2/12/2025
SCALE: 1 : 1	SHEET: 1 OF 1	RELEASED: HWomack	DATE: 2/12/2025

TITLE: 3/8" SIDE PORT, LEVER, 2 POS, FRCTN POS, PILOT RTRN, BRASS & SS, RED KNB, 90D LVR

PART NO.: ZHR3JR

REV.:

THE INFORMATION CONTAINED WITHIN THIS DOCUMENT IS PROPRIETARY TO AAA PRODUCTS AND MAY NOT BE DISCLOSED WITHOUT PRIOR WRITTEN CONSENT

D:\Engineering\Product\valves\Assembly\lever\HR\BWG\ZHR3JR.idw