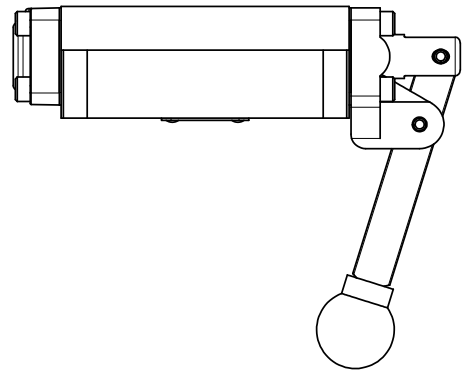

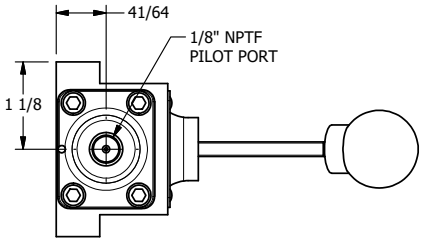

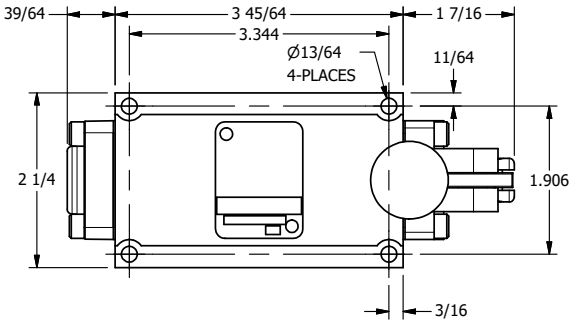

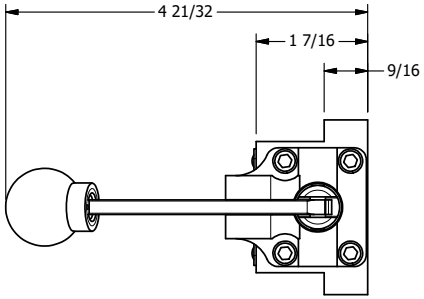

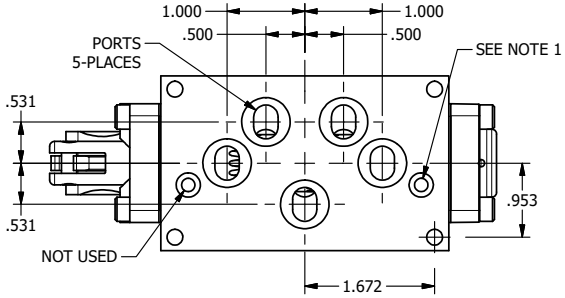

NOTES:
1) REMOTE PILOT CAN BE ROUTED THROUGH SUBPLATE CONNECTION.

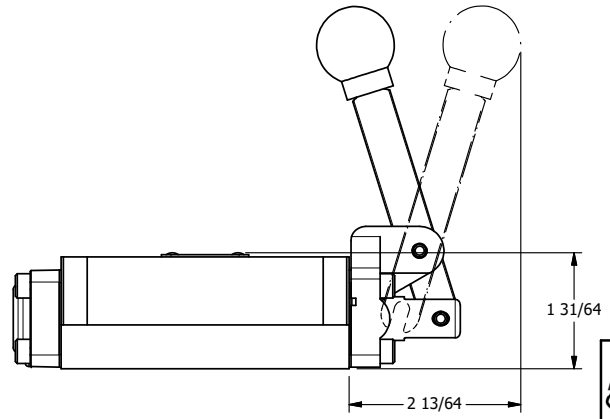

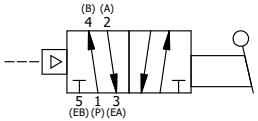

AAA PRODUCTS INTERNATIONAL
7114 Harry Hines Blvd
Dallas, TX 75235

TITLE: 3/8" SUBPLATE, LEVER, 2 POS, FRICTION POS, PILOT RTRN

DRAWING NO.: DIM_HR3P

THE INFORMATION CONTAINED WITHIN THIS DOCUMENT IS PROPRIETARY TO AAA PRODUCTS AND MAY NOT BE DISCLOSED WITHOUT PRIOR WRITTEN CONSENT