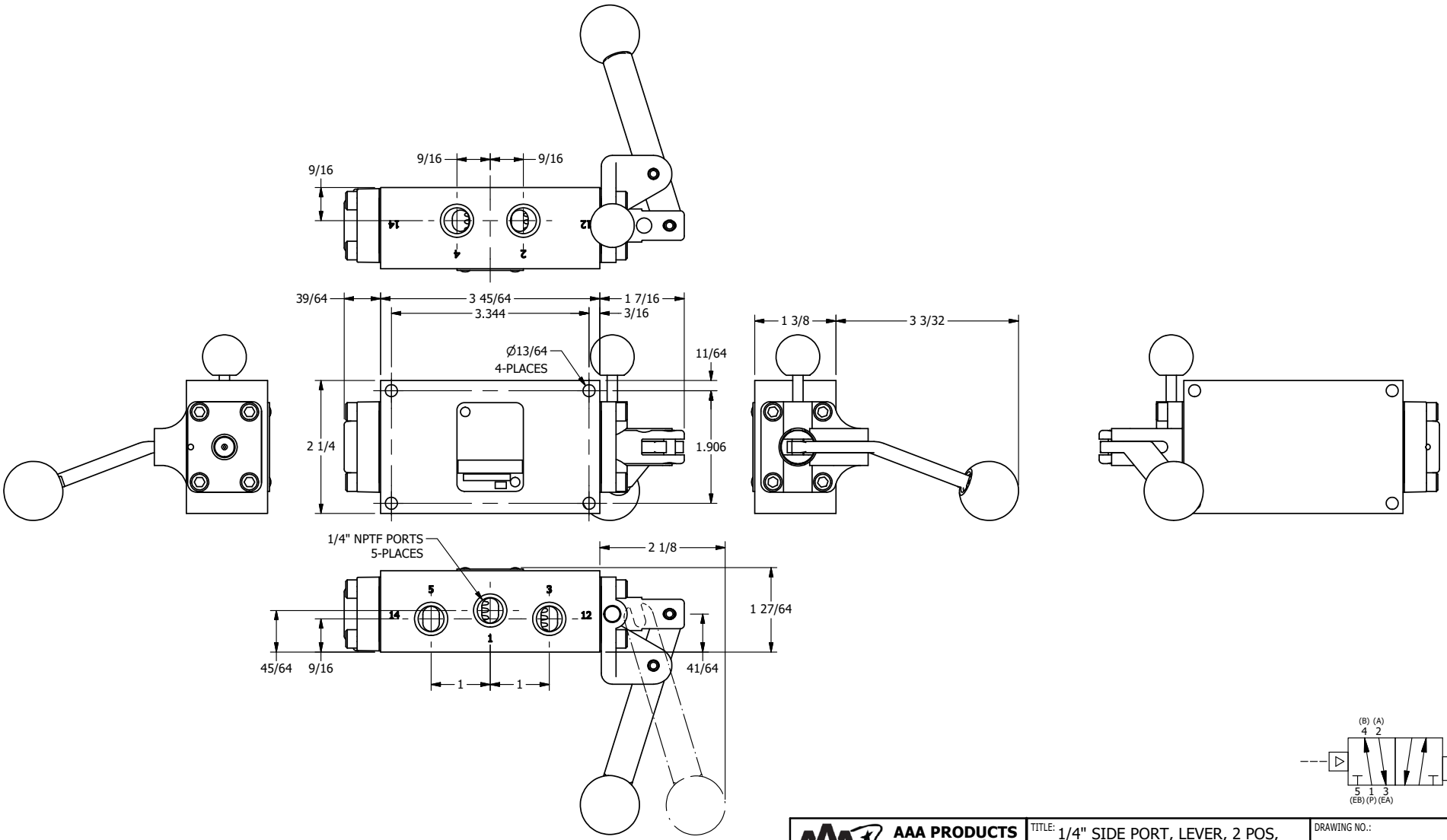

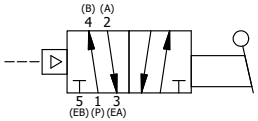

AAA PRODUCTS INTERNATIONAL
7114 Harry Hines Blvd
Dallas, TX 75235

TITLE: 1/4" SIDE PORT, LEVER, 2 POS, FRCTN POS, PILOT RTRN, BNT LVR RT, PNLCK A&C,HVY DTY,RED KNB,180D LVR

DRAWING NO.: DIM_HR2BREHJT

THE INFORMATION CONTAINED WITHIN THIS DOCUMENT IS PROPRIETARY TO AAA PRODUCTS AND MAY NOT BE DISCLOSED WITHOUT PRIOR WRITTEN CONSENT