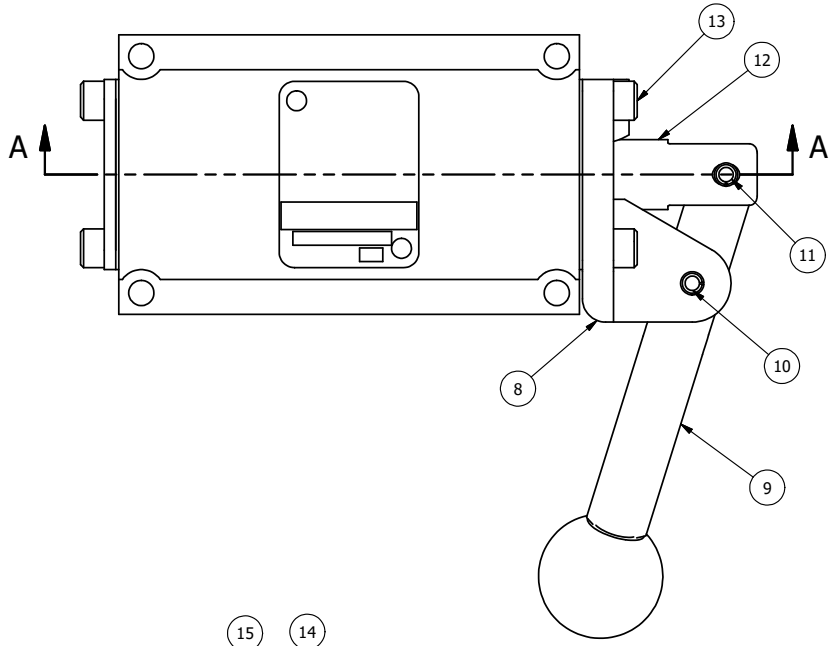


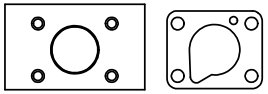

POSITION GASKET ON END OF VALVE SO
MOUNTING HOLES ALIGN
BOTH ENDS (SIDE 'A' SHOWN)

NOTES:
1) ALWAYS GIVE VALVE MODEL, AND PART NUMBER WHEN ORDERING PARTS.

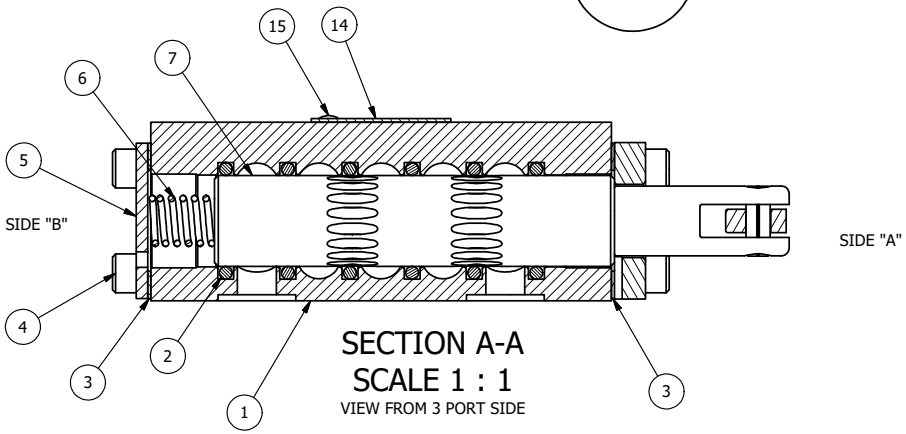


SECTION A-A
SCALE 1 : 1
VIEW FROM 3 PORT SIDE

| FLG | QTY | PART NO | DESCRIPTION |
|---|---|---|---|
| 16 | 1 | SPK-3 | KIT - SUBPLATE MOUNTING, 3/8" SUBPLATE VALVES |
| 15 | 2 | V-212 | SCREW, #2 X 3/16 DRIVE, TYPE U, OVAL HEAD, STAINLESS STEEL |
| 14 | 1 | AN-114 | NAMEPLATE, BLANK, FOR VALVES WITH SPRINGS OR DETENTS |
| 13 | 4 | V-162 | SCREW, 10-24 X 5/8, SOCKET HEAD CAP |
| 12 | 1 | HC3 | CLEVIS - NO DETENTS, 1/4" & 3/8" VALVE |
| 11 | 1 | V-48 | PIN, ROLL 3/16 X 9/16, STEEL, ZINC PLATED |
| 10 | 1 | V-542 | PIN, ROLL 3/16 X 1/2 ZINC PLATED STEEL FOR HE3-4 END CAP |
| 9 | 1 | HL3-521B20 | HAND LEVER WITH RED KNOB, BENT 20 DEG SIDEWAYS, 1/4" & 3/8" VALVES |
| 8 | 1 | HE3-4 | ENDCAP - HAND OPERATOR, 303 STAINLESS, 1/4" & 3/8" STACK VALVE |
| 7 | 1 | S3 | SPOOL - STANDARD, 2 POS, CLSD CTR, 1/4" & 3/8" VALVE |
| 6 | 1 | CS3-2 | SPRING - RETURN, (HO & KO) 1/4" & 3/8" VALVES |
| 5 | 1 | SEC3 | END CAP, 304 STAINLESS STEEL, 1/4" & 3/8" VALVE |
| 4 | 4 | V-37 | SCREW, 10-24 X 1/2, SOCKET HEAD CAP |
| 3 | 2 | ECG3 | GASKET - END CAP, 1/4" & 3/8" VALVE |
| 2 | 6 | V-39 | O-RING, VITON, STD BODY, 1/4" & 3/8" VALVES |
| 1 | 1 | BP3-2E | BODY - SOLID, PLAIN, NO PILOTS, ANODIZED, 3/8" SUBPLATE VALVE |

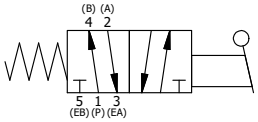


LIMITS ON DIMENSIONS UNLESS OTHERWISE SPECIFIED
2-PL DECIMAL ± .01
3-PL DECIMAL ± .005
FRACTIONAL ± 1/64
ANGULAR ± 1/2'

**AAA PRODUCTS INTERNATIONAL**
7114 Harry Hines Blvd
Dallas, TX 75235

| | | | |
|---|---|---|---|
| DRAWN: RMcKenna | DATE: 11/27/2022 | CHECKED: KWaite | DATE: 11/27/2022 |
| SCALE: 1 : 1 | SHEET: 1 OF 1 | RELEASED: HWomack | DATE: 11/27/2022 |

TITLE:
3/8" SUBPLATE, LEVER, 2 POS,
SPR RTRN, BNT LVR LFT,
RED KNOB, 270D LVR

PART NO.: HO3PBLJRT

REV.:

THE INFORMATION CONTAINED WITHIN THIS DOCUMENT IS PROPRIETARY TO AAA PRODUCTS AND MAY NOT BE DISCLOSED WITHOUT PRIOR WRITTEN CONSENT

D:\Engineering\Product\Valves\Assembly\Level1\HO3pv\Grt\HO3PBLJRT.dw