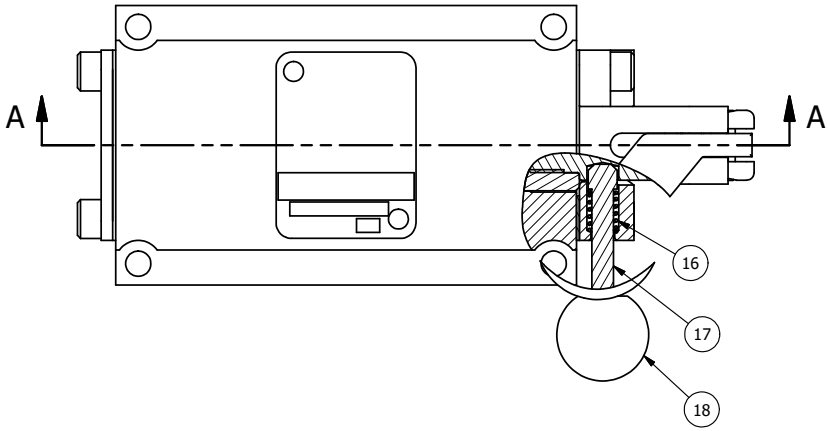

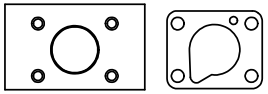

POSITION GASKET ON END OF VALVE SO
MOUNTING HOLES ALIGN
BOTH ENDS (SIDE 'A' SHOWN)

NOTES:
1) ALWAYS GIVE VALVE MODEL, AND PART NUMBER WHEN ORDERING PARTS.

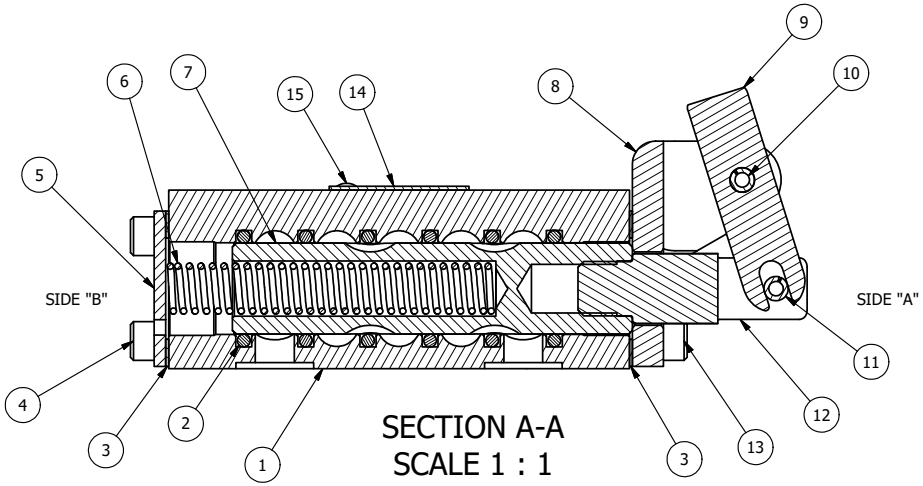

SECTION A-A
SCALE 1 : 1
VIEW FROM 3 PORT SIDE

FLG	QTY	PART NO	DESCRIPTION
19	1	SPK-3	KIT - SUBPLATE MOUNTING, 3/8" SUBPLATE VALVES
18	1	V-175	KNOB, BLACK, (BRASS 10-32 INSERT), 3/4 DIA BALL, PIN LOCK
17	1	V-315-SS	PIN, PIN LOCK, 303 STAINLESS, 1/4" & 3/8" VALVE
16	1	BBSS-1	SPRING - BUTTON BLEEDER, STAINLESS STEEL, 1/8" NPTF
15	2	V-212	SCREW, #2 X 3/16 DRIVE, TYPE U, OVAL HEAD, STAINLESS STEEL
14	1	AN-114	NAMEPLATE, BLANK, FOR VALVES WITH SPRINGS OR DETENTS
13	4	V-162	SCREW, 10-24 X 5/8, SOCKET HEAD CAP
12	1	HC3-2PL	CLEVIS - POS. A & C PINLOCKS, 1/4" & 3/8" VALVE
11	1	V-48	PIN, ROLL 3/16 X 9/16, STEEL, ZINC PLATED
10	1	V-508	PIN, ROLL 3/16 X 5/8 ZINC PLATED STEEL FOR 1/4 FOOT ENDCAP
9	1	HL3-521B20	HAND LEVER WITH RED KNOB, BENT 20 DEG SIDEWAYS, 1/4" & 3/8" VALVES
8	1	HE3-5PLL	END CAP, LEVER, PIN LOCK, LEFT, 303 STAINLESS STEEL, 1/4" & 3/8" VALVE
7	1	S3	SPOOL - STANDARD, 2 POS, CLSD CTR, 1/4" & 3/8" VALVE
6	1	CS3-2	SPRING - RETURN, (HO & KO) 1/4" & 3/8" VALVES
5	1	SEC3	END CAP, 304 STAINLESS STEEL, 1/4" & 3/8" VALVE
4	4	V-37	SCREW, 10-24 X 1/2, SOCKET HEAD CAP
3	2	ECG3	GASKET - END CAP, 1/4" & 3/8" VALVE
2	6	V-39	O-RING, VITON, STD BODY, 1/4" & 3/8" VALVES
1	1	BP3-2E	BODY - SOLID, PLAIN, NO PILOTS, ANODIZED, 3/8" SUBPLATE VALVE

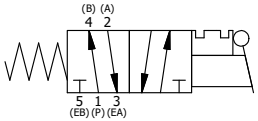

LIMITS ON DIMENSIONS UNLESS OTHERWISE SPECIFIED
2-PL DECIMAL ± .01
3-PL DECIMAL ± .005
FRACTIONAL ± 1/64
ANGULAR ± 1/2'

AAA PRODUCTS INTERNATIONAL
7114 Harry Hines Blvd
Dallas, TX 75235

DRAWN: RMcKenna	DATE: 11/29/2022	CHECKED: KWaite	DATE: 11/29/2022
SCALE: 1 : 1	SHEET: 1 OF 1	RELEASED: HWomack	DATE: 11/29/2022

TITLE:
3/8" SUBPLATE, LEVER, 2 POS,
SPR RTRN, BNT LVR LFT,
PIN LOCK A & C, HVY DTY, RED KNOB

PART NO.: HO3PBLEHJ

REV.:

THE INFORMATION CONTAINED WITHIN THIS DOCUMENT IS PROPRIETARY TO AAA PRODUCTS AND MAY NOT BE DISCLOSED WITHOUT PRIOR WRITTEN CONSENT

D:\Engineering\Product\Valves\Assembly\Lever\HO3pv\GvHO3PBLEHJ.dw