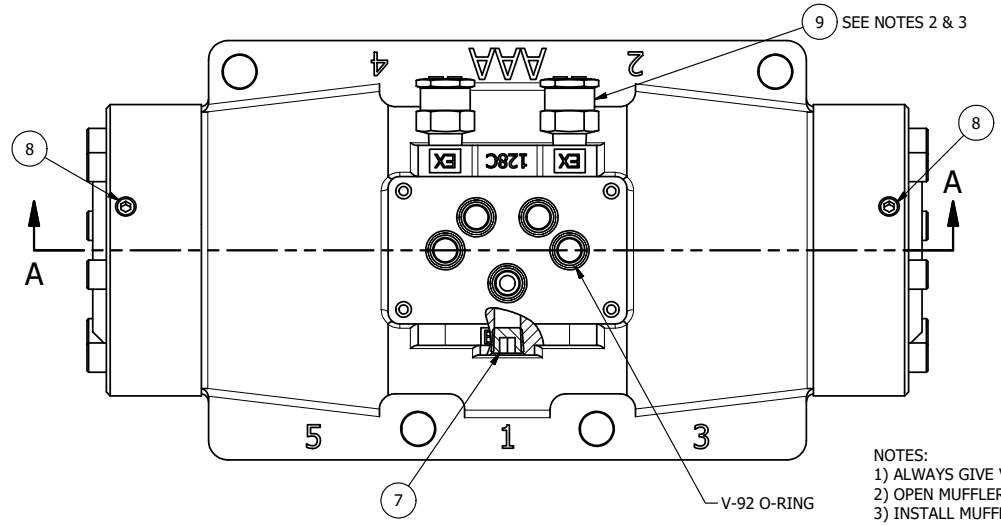

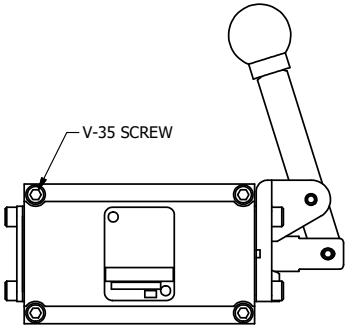

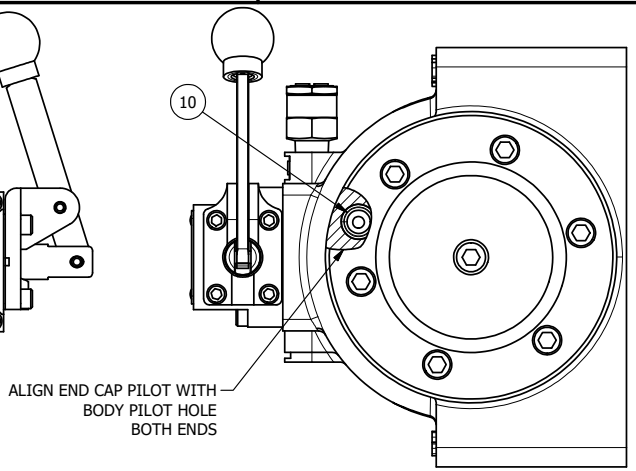

NOTES:
1) ALWAYS GIVE VALVE MODEL AND PART NUMBER WHEN ORDERING.
2) OPEN MUFFLER 2 TURNS FROM CLOSED POSITION. TIGHTEN LOCK NUT ON MUFFLER.
3) INSTALL MUFFLER WITH MAGNALUBE-G GREASE 1 TO 1-1/2 TURNS FROM HAND TIGHT INTO BODY.

THE FOLLOWING PARTS ARE INCLUDED WITH THE SUBPLATE VALVE AND ARE USED TO ASSEMBLE.		
QTY	PART NO	DESCRIPTION
5	V-92	O-RING, BUNA-N, 70 DURO, AS-014, (REF 1/2 X 5/8 X 1/16), 3/8" SUBPLATE
4	V-35	SCREW, 10-24 X 7/8, SOCKET HEAD CAP

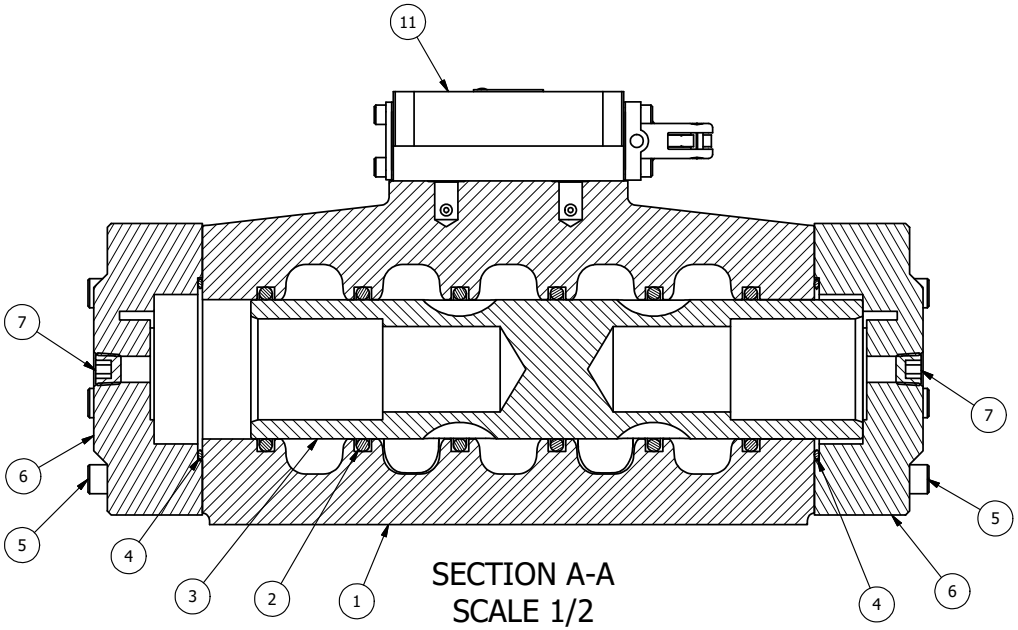

SECTION A-A
SCALE 1/2
VIEW FROM 3 PORT SIDE

FLG	QTY	PART NO	DESCRIPTION
11	1	HE3PR	3/8" SUBPLATE, LEVER, 2 POS, FRICTION POS, LEVER RTRN, 90D LEVER
10	2	V-89	O-RING, BUNA-N, 70 DURO, AS-110, (REF 3/8 X 9/16 X 3/32), 1" & 2" SUBPLATE PILOT
9	2	MFC2	ASSEMBLY - MUFFLER FLOW CONTROL, 1/4" NPT
8	2	V-231	PLUG, SOCKET PRESSURE 1/16-27X 7/8 TAPER FOR 122V,192V,FOR EC
7	3	V-337	PLUG, SOCKET 1/4-18 FLUSH SEAL PLUG
6	2	PEC12E	ENDCAP - PILOT, SOLID, 6061-T6 AL, 1-1/2" & 2" VALVES
5	12	V-143	SCREW, 5/16-18 X 2, SOCKET HEAD CAP
4	2	V-124	O-RING, BUNA-N, 70 DURO, AS-231, (REF 2-5/8 X 2-7/8 X 1/8), 2 POS, 1-1/2" & 2" VALVES
3	1	S12	SPOOL - STANDARD, 2 POS - 3 POS CLOSED CTR, 1 1/2" & 2" VALVE
2	6	V-123	O-RING, BUNA-N, 70 DURO, AS-331, (REF 2-1/4 X 2-5/8 X 3/16), 1-1/2" & 2" VALVES
1	1	B12-6	BODY, 1 1/2" SIDE PORT, PIGGY BACK

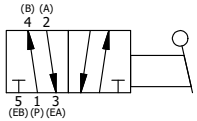

LIMITS ON DIMENSIONS UNLESS OTHERWISE SPECIFIED	2-PL DECIMAL ± .01 3-PL DECIMAL ± .005 FRACTIONAL ± 1/64 ANGULAR ± 1/2'	AAA PRODUCTS INTERNATIONAL	**AAA PRODUCTS INTERNATIONAL** **7114 Harry Hines Blvd** **Dallas, TX 75235**
DRAWN: RMcKenna	DATE: 9/8/2015	CHECKED: KWaite	DATE: 9/8/2015
SCALE: 1/2	SHEET: 1 OF 1	RELEASED: HWomack	DATE: 9/8/2015
TITLE: 1-1/2" SIDE PORT, LEVER, 2 POS, FRICTION POS, LEVER RTRN, 90D LEVER		PART NO.: HE12R	REV.:

THE INFORMATION CONTAINED WITHIN THIS DOCUMENT IS PROPRIETARY TO AAA PRODUCTS AND MAY NOT BE DISCLOSED WITHOUT PRIOR WRITTEN CONSENT

D:\Engineering\Product\Valve\Assembly\Level1\HE3PR\G1\HE12R.dw