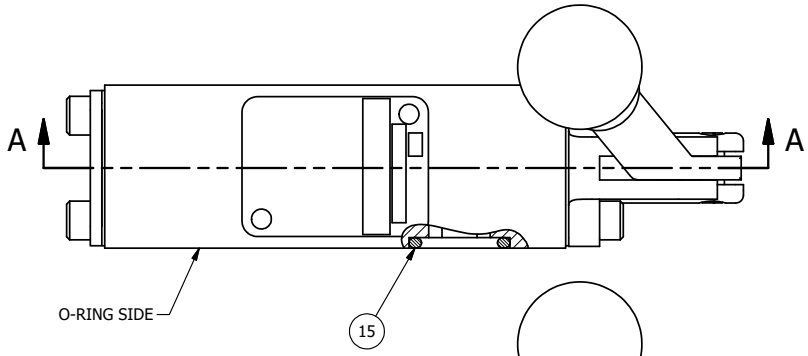

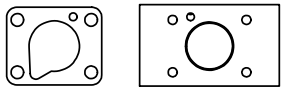

POSITION GASKET ON END OF VALVE
TO SEAL PILOT HOLE IF PRESENT,
BOTH SIDES (SIDE 'B' SHOWN)

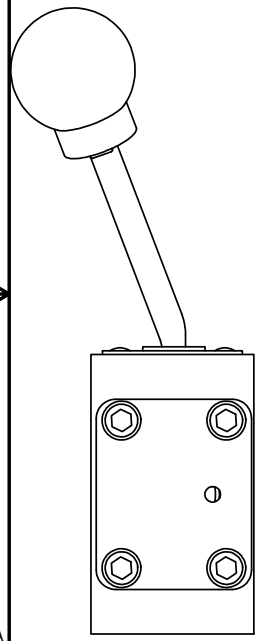

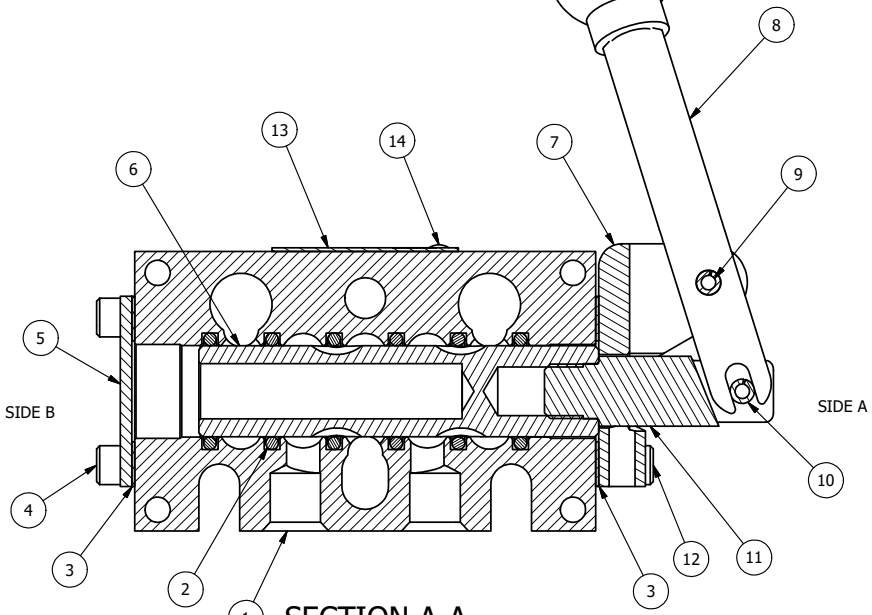

SECTION A-A
SCALE 1 : 1

NOTES:
1) ALWAYS GIVE VALVE MODEL AND PART NUMBER WHEN ORDERING PARTS.

FLG	QTY	PART NO	DESCRIPTION
15	3	V-110	O-RING, BUNA-N, 70 DURO, AS-114, (REF 5/8 X 13/16 X 3/32), 1/4" SLEEVE, 1/2" SUB, STACK
14	2	V-212	SCREW, #2 X 3/16 DRIVE, TYPE U, OVAL HEAD, STAINLESS STEEL
13	1	AN-115	BLANK NAMEPLATE FOR HE,KE,KD,RR,D,CR,PP,SR,SS VALVES.
12	4	V-162	SCREW, 10-24 X 5/8, SOCKET HEAD CAP
11	1	BHC3	CLEVIS - NO DETENTS, 1/4" & 3/8" STACKING VALVE
10	1	V-48	PIN, ROLL 3/16 X 9/16, STEEL, ZINC PLATED
9	1	V-542	PIN, ROLL 3/16 X 1/2 ZINC PLATED STEEL FOR HE3-4 END CAP
8	1	HL3-24B20	HAND LEVER WITH KNOB, BENT 20 DEG SIDEWAYS, 1/4" & 3/8" VALVES
7	1	HE3-4	ENDCAP - HAND OPERATOR, 303 STAINLESS, 1/4" & 3/8" STACK VALVE
6	1	S3	SPOOL - STANDARD, 2 POS, CLSD CTR, 1/4" & 3/8" VALVE
5	1	SEC3	END CAP, 304 STAINLESS STEEL, 1/4" & 3/8" VALVE
4	4	V-37	SCREW, 10-24 X 1/2, SOCKET HEAD CAP
3	2	ECG3	GASKET - END CAP, 1/4" & 3/8" VALVE
2	6	V-39	O-RING, VITON, STD BODY, 1/4" & 3/8" VALVES
1	1	B2-10E	FINISHED - SOLID BODY, UPPER PILOTS, 1/4" STACKING VALVE

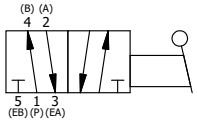

LIMITS ON DIMENSIONS UNLESS OTHERWISE SPECIFIED
2-PL DECIMAL ± .01
3-PL DECIMAL ± .005
FRACTIONAL ± 1/64
ANGULAR ± 1/2'

AAA PRODUCTS INTERNATIONAL
7114 Harry Hines Blvd
Dallas, TX 75235

DRAWN: RMcKenna	DATE: 8/20/2015	CHECKED: KWaite	DATE: 8/20/2015
SCALE: 1 : 1	SHEET: 1 OF 1	RELEASED: HWomack	DATE: 8/20/2015

TITLE: 1/4" STACK, LEVER, 2 POS, FRICTION POS, LEVER RTRN, BENT LEVER RIGHT

PART NO.: BHE2BR

REV.:

THE INFORMATION CONTAINED WITHIN THIS DOCUMENT IS PROPRIETARY TO AAA PRODUCTS AND MAY NOT BE DISCLOSED WITHOUT PRIOR WRITTEN CONSENT

D:\Engineering\Product\Valve\Assembly\Lever\HE\SVG\BHE2BR.dwg