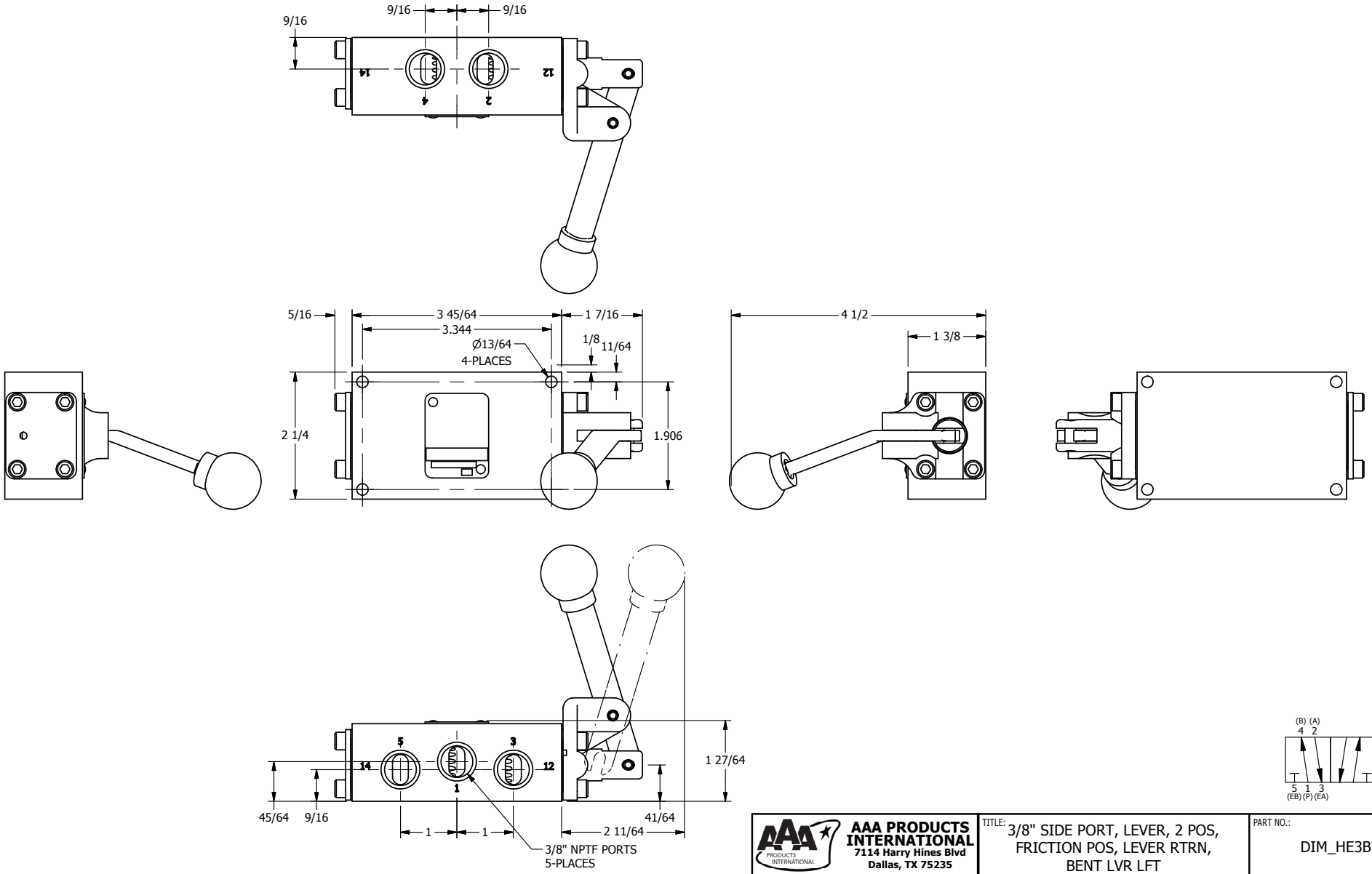

AAA PRODUCTS INTERNATIONAL
7114 Harry Hines Blvd
Dallas, TX 75235

TITLE: 3/8" SIDE PORT, LEVER, 2 POS, FRICTION POS, LEVER RTRN, BENT LVR LFT

PART NO.: DIM_HE3BL

THE INFORMATION CONTAINED WITHIN THIS DOCUMENT IS PROPRIETARY TO AAA PRODUCTS AND MAY NOT BE DISCLOSED WITHOUT PRIOR WRITTEN CONSENT